OLLSCOIL TEICNEOLAÍOCHTA BHAILE ÁTHA CLIATH

TECHNOLOGICAL UNIVERSITY DUBLIN

Title:	**Pump Impeller Performance Analysis**
Description:	**An Analysis on the Etanorm G KSB Water Pump Impeller**
Submitted by:	**Robert Lawlor**
	D20125101
Date Submitted:	**27/04/2021**

Submitted for

Module:	**Final Year Project**
Programme :	**Mechanical Engineering**
Supervisor:	**Gerard Nagle**

Declaration

I certify that this submission is entirely my own work and has not been taken from the work of others, save and to the extent that such work has been cited and acknowledged within the text of my work.

Signature: Robert Lawlor

Date: 27 April 2021

Acknowledgements

I would like to thank my Supervisor Mr. Gerard Nagle for sharing his knowledge and helping me throughout this project.

Contents

Symbols, Abbreviations and Definitions

Symbol	Description	Units
A	Area, cross section	m^2
a_1/a_2	Distance between vanes	m
b_1/b_2	impeller outlet width	m
BEP	best efficiency point	
c	absolute velocity	m/s
c_d	flow velocity in discharge nozzle	m/s
c_p	specific heat at constant pressure	
D, d	diameter	m
d_{1i}	inside diameter of blade	m
d_n	hub diameter	m
e	vane thickness	m
F	Force	N
F_{ax}	axial force	
F_R	radial force	
f_q	impeller eyes	
g	acceleration due to gravity	m/s^2
H	Head per stage	
H_{TOT}	total head	
H_p	static pressure rise	
M	Torque	
$\dot{m}$	mass flow rate	kg/s
NPSH	Net positive suction head	
n	rotational speed	
n_q	specific speed	rpm, m^3/s
P	power	W
P_m	mechanical power	W
P_{fluid}	power absorbed by fluid	W
P_{shaft}	shaft power	W
P_u	Useful power = $\rho \times g \times H_{TOT} \times Q$	W
p	static pressure	
Q	volumetric flow rate	m3/s
Q_{la}	Flow rate through impeller	m3/s
Q_{le}	flow rate through diffuser	m3/s
Q_{pump}	flow rate through pump	m3/s
q	flow rate at BEP	m3/s
Re	Reynolds number	
s	radial clearance	
T	Temperature	°C
u	Circumferential velocity	m3/s
U_1	blade velocity at inlet	m/s
U_2	blade velocity at outlet	m/s

V	Volume	m^3
v_1	fluid velocity at point 1	m/s
v_2	fluid velocity at point 2	m/s
$W1_r$	radial relative inlet velocity	m/s
$W1_t$	tangential relative inlet velocity	m/s
$W2_r$	radial relative outlet velocity	m/s
$W2_t$	tangential relative outlet velocity	m/s
$W_{average}$	average relative velocity	m/s
Z_{la}	number of impeller blades	
α	angle between direction of circumferential and absolute velocity	°
β	angle between relative velocity vector and negative direction of circumferential velocity	°
β	angular velocity of fluid between impeller and casing	
ϒ	slip factor	
η	overall efficiency	
δ	displacement thickness	
ξ	loss coefficient	
ω	angular rotor velocity	
Ψ	head coefficient	
τ	blade blockage factor	
ρ	density	
ϕ	loss factor	
σ	shear stress	
φ	flow coefficient	

Introduction

This project consists in a final year bachelor's degree undertaken in the academic year 20/21. This project will approach a pump impeller performance analysis. The analysis will be modelled on a standardised water pump, Etanorm G 080 065 160 which is manufactured by the KSB Group, A German multinational manufacturer of pumps and valves. The physical KSB pump can be found in Bolton St. This was used to gather measurements to be used for mathematical and computer aided analysis. The performance of the impeller will be done mathematically and by use of a commercial tool, CFturbo. CFturbo is a powerful software that is used in the design of turbomachinery components. It allows the design of a component such as impeller, volute, hub from scratch and allows the user to enter parameters that relate specially to a desired output. CFturbo allows to elaborate on characteristics of the pump, input, and output. Blade properties can be calculated and from this, velocity triangles formed which form the basis of the impeller performance. CFturbo will produce a model of the impeller and other components and will show the geometry in 3-D. It also allows the modification of designs. Once a design is complete, it can be simulated. This involves using CFD software to compile data on the flow and performance of the impeller. the impeller can then be optimized, either to increase performance or to investigate how the impeller operates under different design parameters. It is proposed that a prototype of the impeller can then be 3-D printed in Bolton Street. The mathematical model for the impeller is compared to the data sheet. The focus of this project will be to examine how the impeller will perform, and then alter the geometry by changing vane angles, inlet and outlet width, and hub plate diameter to increase performance. to undertake the report a level of knowledge in turbomachinery and fluid dynamics was required.

Review of exciting products/technologies

The KSB Etanorm type water pump is a centrifugal pump used for handling clean or aggressive fluids which are neither chemically nor mechanically aggressive to the materials that make up the pump components. It is found in water supply systems, swimming pools, fire-fighting systems and general drainage and irrigation systems.

The KSB pump is a volute casing pump. It features a vertical joint relative to the shaft that is known as a radically split volute casing. Is contains a closed radial impeller with 6 multiply curved vanes and standard floating bearings with deep grove ball bearings.

Figure 1 KSB Etanorm pump in BoltonSt.

ETANORM G 080 065 160	
Impeller	
Impeller outlet diameter	21.0mm
Free passage diameter	12.2mm
impeller inlet diameter	92.0mm
Impeller diameter	Max : 174mm
	Min : 132mm
Speed limit	Max : 3900 RPM
	Min : 500RPM
Max flow	740m^3/h
Min Flow	1.5m^3/h
Max head	160m
Min head	2m
Fluid temp	-30°C to +140°C

Table 1 KSB pump operating properties

The impeller is the beating heart of the pump. The rotating impeller changes the stagnation enthalpy of the fluid that is moving through it. It does this by doing positive work in the system which is linked to the pressure change occurring in the fluid. The Etanorm is long coupled on a baseplate.

4.5 Design and function

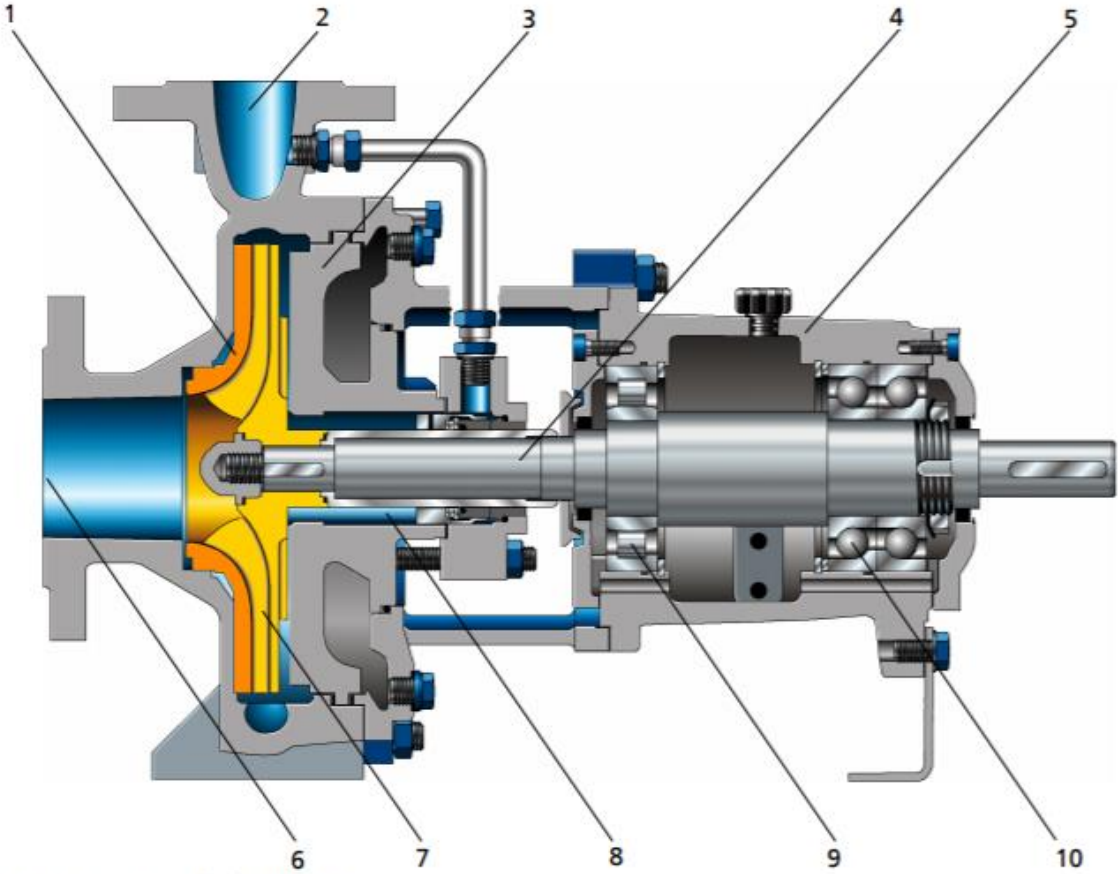

Fig. 6: Sectional drawing

1	Wear plate	2	Discharge nozzle
3	Casing cover	4	Drive shaft
5	Bearing bracket	6	Suction nozzle
7	Impeller	8	Shaft seal
9	Rolling element bearing, pump end	10	Rolling element bearing, motor end

Figure 2 Pump configuration (KSB, 2020)

The pump is designed with an axial fluid inlet and a radial outlet. The hydraulic system runs in its own bearings and is connected to the motor by a shaft coupling. The fluid enters the pump axially via the suction nozzle (6) and is accelerated by the rotating impeller (7). In the flow passage the of the pump casing the kinetic energy of the fluid is converted into pressure energy. The fluid is pumped to the discharge nozzle (2) where it leaves the pump. The clearance gap (1) prevents any fluid from flowing back from the casing to the to the suction nozzle. At the rear size of the impeller, the shaft (4) enters the casing via the casing cover (3). The shaft passage through the cover is sealed to the atmosphere with a shaft seal (8). The shaft runs in rolling element bearings (9 & 10), which are supported by a bearing backet (5) linked with the pump casing.

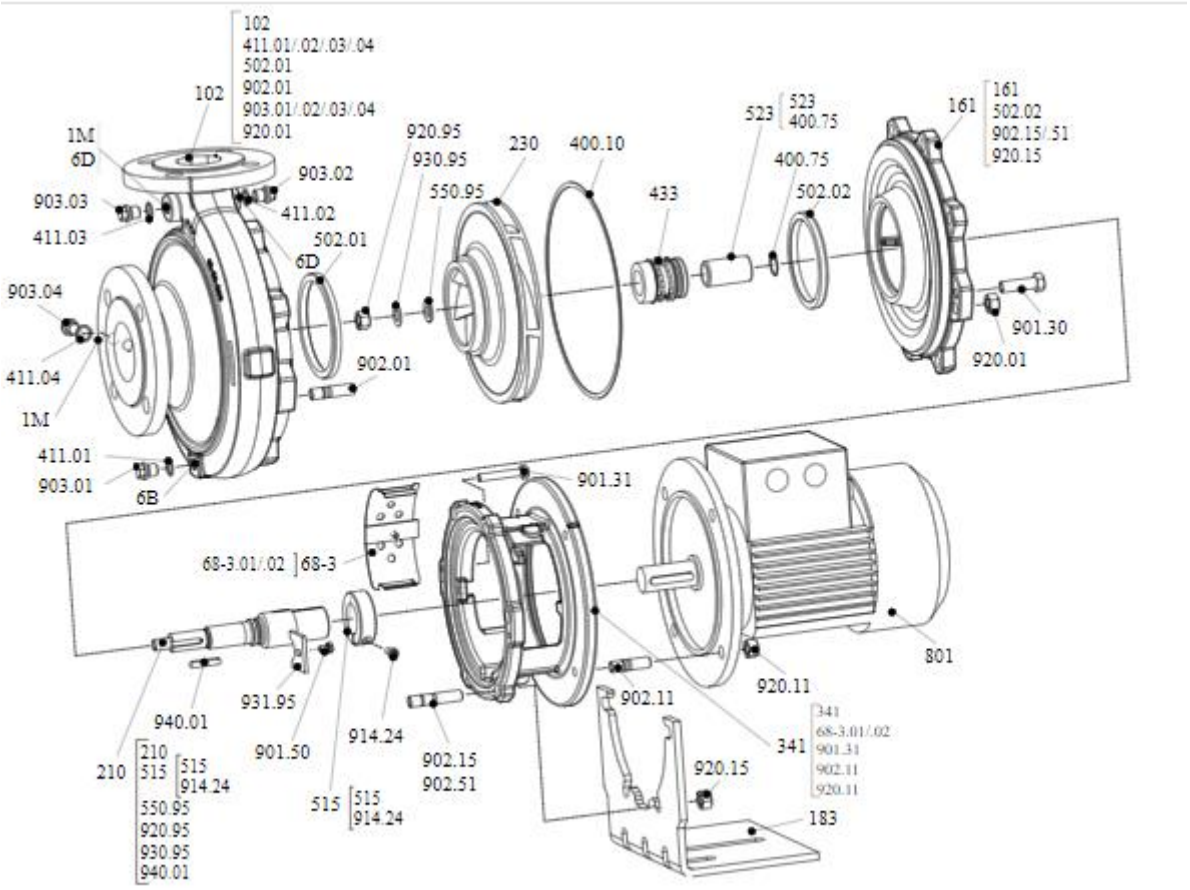

(KSB, 2020)

Figure 3 Exploded view of the Etanorm identifying the part. Impeller is item 230

With the Etanorm range, impellers are trimmed by the manufacturer to meet the duty requirements ensuring that maximum efficiency is achieved.

At 2900rpm, the pump is produced with 15, 18.5, 22, 30 or 37kW motors. The motor is determined by the duty and what impeller trim is required.

100-080-160	15,00	28,42	160M	V4	-	133,04	48230222	**3.572,90**	48230223	**3.451,10**	48230224
100-080-160	18,50	33,68	160L	V4	-	150,04	48230237	**4.030,84**	48230238	**3.909,04**	48230239
100-080-160	22,00	40,53	180M	V4	-	215,67	48230132	**4.515,59**	48230133	**4.393,79**	48230134
100-080-160	30,00	55,79	200L	V4	-	289,08	48230423	**6.634,28**	48230424	**6.512,47**	48230425
100-080-160	37,00	68,42	200L	V4	-	289,08	48230426	**7.288,83**	48230427	**7.167,02**	48230428
100-080-200	18,50	33,68	160L	V4	-	161,34	48230429	**4.595,09**	48230430	**4.392,08**	48230431

Figure 4 Prices and technical data

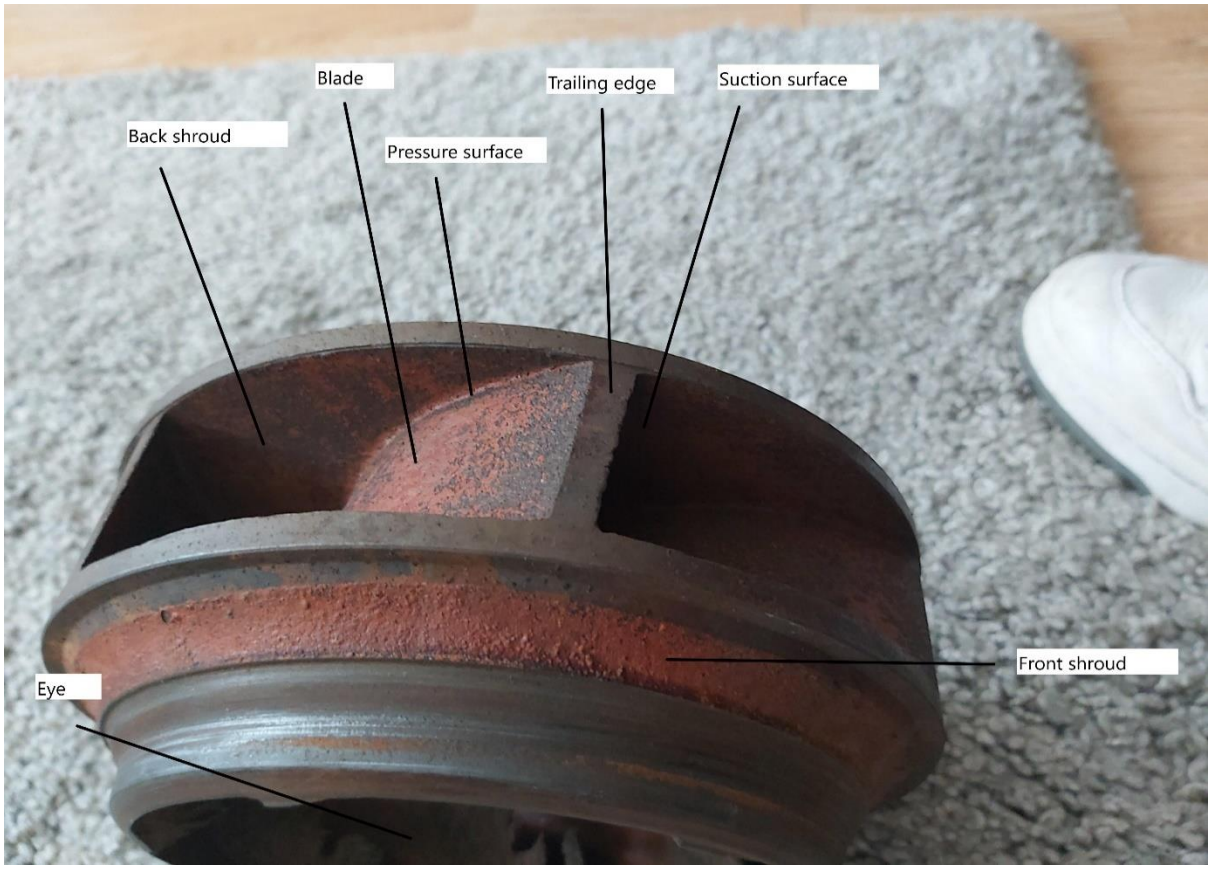

Figure 5 A closer look at the radial impeller

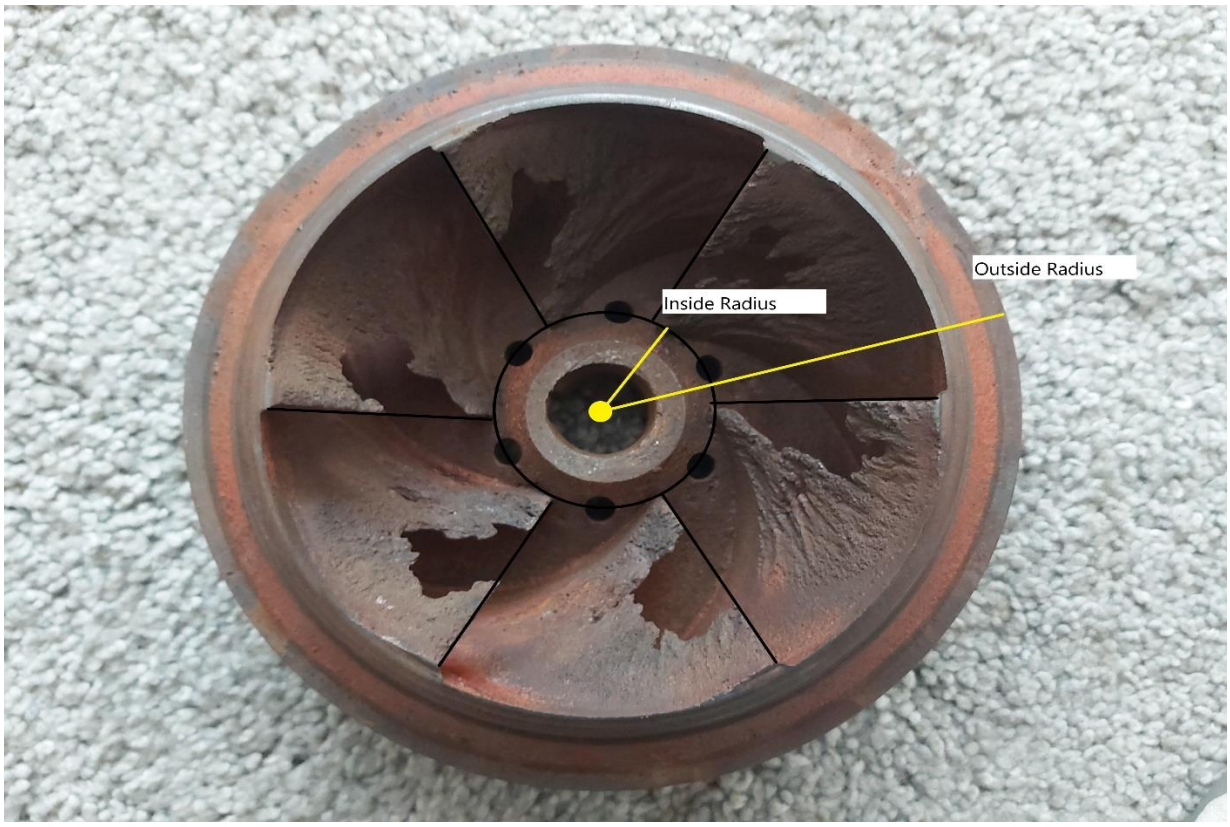

Figure 6 Inner and Outer Radius

Fluid Dynamics and the pump

The fluid that is pumped through the impeller can be thought of as the blood that is pumped by the heart around the body. Constant pressure must be present in our bodies pipes and the Heart must remain operational to keep everything in working order. This includes service – maybe changing a bearing or wear ring, maintenance – regular checks to make sure pump is performing its duties, or a transplant – an older pump has lived thought its service life and for the pumping to continue, a new pump is needed. In turbomachinery applications, flow is denoted in two flows – absolute and relative. The absolute flow describes flow in fixed coordinates which the relative flow deal with flow in a rotating reference frame. In the relative reference frame, when a fluid particle moves outward on the rotating disk, it will travel in a straight line. While with the absolute reference frame, it travels in a spiral shape outward from the axis of rotation. The conditions that describe the velocity profiles of the impeller are the peripheral velocity $u = \omega \times r$, the retlative w and absolute velocity c.

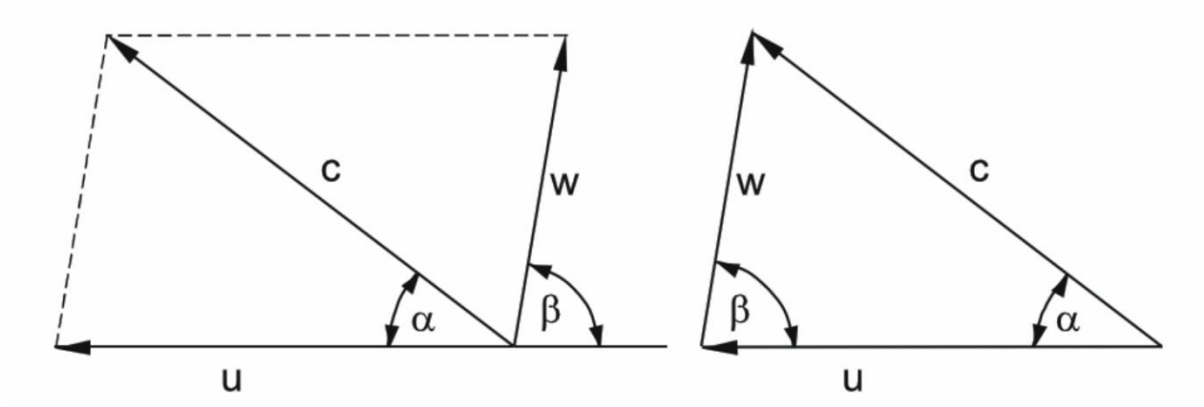

Figure 7 Vector Diagram (Gulich, 2020)

When flow will be influence by factors that include the geometry of the impeller, volute, the boundary conditions, and mechanical inputs such as motor speed. The pump, or system has a quantity of fixed mass when operating at a constate state. This means the mass m of the system is conserved and does not change over time. The conservation of mass is noted

$$\frac{dm}{dt} = 0$$

If the surrounding begins to exert a force F on the system, Newtons second law states that the mass will begin to accelerate

$$F = \frac{m}{a} = m\frac{dV}{dt} = \frac{d}{dt}(mV)$$

The surroundings then exert a moment M about the centre of the mass and this creates a rotation effect

$$M = \frac{dH}{dt}$$

Where H is equal to the angular momentum of the system about its centre of mass. This can be exchanged for the equation to denote a rigid body rotating about a fixed axis, an impeller.

$$M_x = I_x \frac{d}{dt}(\omega_x)$$

Where ω_x is the angular velocity of the body and I_x ,is the mass moment of inertia. Heat or work done added to the system changes the systems energy.

$$\delta Q - \partial W = dE$$

$$\dot{Q} - \dot{W} = \frac{dE}{dt}$$

The second law of thermodynamics relates entropy change to the heat added and the temperature in the system.

$$dS \geq \frac{\delta Q}{T}$$

(White, 2016)

The conservation of energy is the sum of input or output thermal power and mechanical power according to the first law of thermodynamics. The total enthalpy of a system is the sum of the internal energy, the static pressure energy, the kinetic energy, and potential energy.

$$h = U + \frac{p}{\rho} + \frac{c^2}{2} + gz$$

Mass flow rates at the inlet and outlet of the system are equal. The power can be found without heat exchange considered, as the product of mass flow and total enthalpies difference.

$$P = \dot{m}\,(h_{inlet} - h_{outlet})$$

Bernoulli's equation is used when the exchange of mass and energy to the surrounding environment is considered zero. It is used along streamlines and closed channels where incompressible flow is in operation.

$$P_1 + \frac{1}{2}\rho {V_1}^2 + \rho g h_1 = P_2 + \frac{1}{2}\rho {V_2}^2 + \rho g h_2$$

(Gülich, 2020)

Newton states in his third law of motion that a body remains in uniform, straight line motion or at rest, if it is not acted upon by external forces to change these conditions. For a fluid particle to move on a cured path like it will in an impeller a force must be acted on that particle. Centripetal force is the net force that acts upon the particle. Fluid of mass is subjected to the forces in the flow direction and perpendicular to the streamline. Newton's law $F = m \times \frac{dc}{dt}$ forms this.

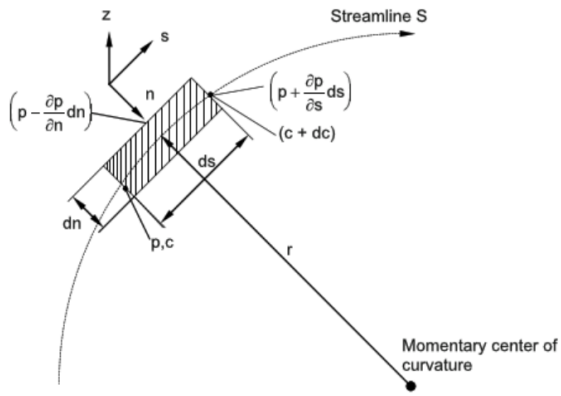

Figure 8 Equilibrium of forces on a particle (Gülich, 2020)

The flow on a cured path is always coupled to pressure gradients perpendicular to the flow direction such that the pressure decreases from the outside to the inside towards the momentary centre of the streamline curvature. The pressure differential created the centripetal force that makes flow on a cured path possible, keeping the body force acting on the fluid element at equilibrium (Gülich, 2020).

Pressure, in curved channels like the volute, decreases from outside towards inside in the direction of the centre of curvature. this pressure slope confers to the mass particles the fundamental centripetal acceleration that permits movement on a curved path. The flow velocity near the wall of the volute is lower than the flow velocity in the centre channel, but the main flow imposes the pressure gradient that is perpendicular to the streamlines. The flow nearer the walls of the volute follows a narrower radius than the primary flow. The development of the secondary flow can be described as follows: because of their greater velocity the fluid particles in the centre of the channel are subjected to greater centrifugal forces than the slower flowing particles near the wall. Centre flow particles are consequently deflected to the outside; for continuity reasons fluid will flow back to the inside through the boundary layer (Gülich, 2020).

A secondary flow path requires a path length and a velocity distribution that resembles the angular momentum conservation in the bends. Secondary flow is important as it influences the velocity distribution in in stationary and rotating curved channels such as those found in the impeller.

Pressure losses along the flow path within the pump are caused by friction losses and flow separation. Stall creates high pressure losses and is caused by the mixing of stalled fluids with non-separated flow. Energy losses or friction resistance can create shear stress in the boundary layers.

$$\tau = \rho\,(\upsilon + \nu_t)\frac{dw}{dy}$$

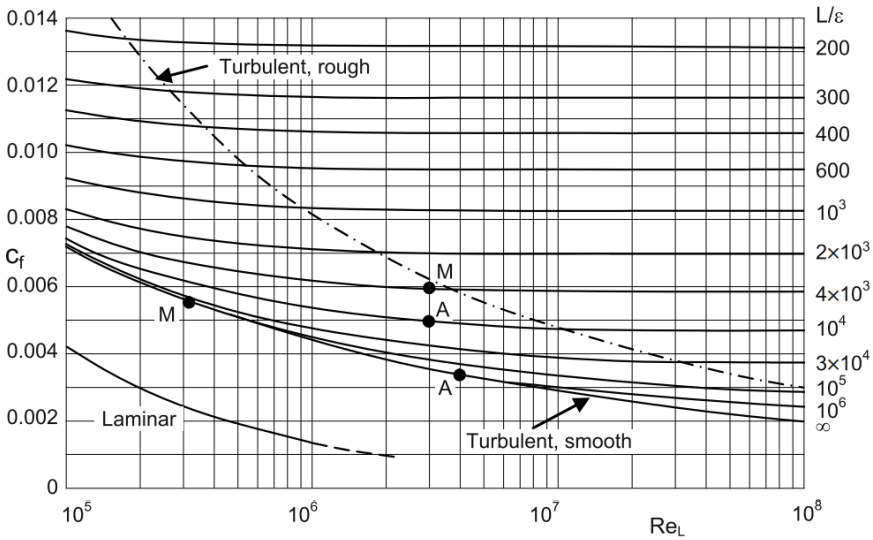

Figure 9 Friction coefficients of flat planes in parallel flow (Gülich, 2020)

Geometry of the pump and impeller

There are many parameters involved in the design of an impeller. for years, these calculations have been done by hand but thanks to modern computer intelligence software packages such as CFturbo and SOLIDWORKS can provide many of the complex sums and details.

	Location, main dimensions	Blade blockage	Flow parameters	Vane angles
Impeller: z_{La}	Inlet: d_{1a}, d_{1m}, d_{1i}, d_n, a_1, e_1	without	u_{1a}, u_{1m}, u_{1i}, c_{1m}, c_{1u}, c_1, w_1, α_1, β_1	$\beta_{1B,a}$ β_{1B} $\beta_{1B,i}$
		$\tau_1 = \dfrac{1}{1 - \dfrac{z_{La} e_1}{\pi\ d_1\ \sin\beta_{1B} \sin\lambda_{La}}}$	c_{1m}', c_{1u}, w_1', c_1', α_1', β_1' $w_{1q} = Q_{La}/(z_{La}\ A_{1q})$	
	Outlet: d_{2a}, d_{2m}, d_{2i}, b_2, a_2, e_2, e	$\tau_2 = \dfrac{1}{1 - \dfrac{z_{La} e_2}{\pi\, d_2 \sin\beta_{2B} \sin\lambda_{La}}}$	c_{2m}', c_{2u}, c_2', w_{2u}, w_2', α_2', β_2'	$\beta_{2B,a}$ β_{2B} $\beta_{2B,i}$
		without	u_{2a}, u_{2m}, u_{2i}, c_{2m}, c_{2u} c_2, w_{2u}, w_2, α_2, β_2	
Diffuser or volute: z_{Le}	Inlet: d_3, b_3, a_3, e_3 $A_{3q} = a_3\ b_3$	without	c_{3m}, c_{3u}, c_3, α_3	$\alpha_{3B,a}$ α_{3B} $\alpha_{3B,i}$
		$\tau_3 = \dfrac{1}{1 - \dfrac{z_{Le}\ e_3}{\pi\, d_3 \sin\alpha_{3B} \sin\lambda_{Le}}}$	c_{3m}', c_{3u}, c_3', α_3' $c_{3q} = Q_{Le}/(z_{Le}\ A_{3q})$	
	Outlet: d_4, b_4, a_4, e_4, $A_4 = a_4\ b_4$	$c_4 = \dfrac{Q_{Le}}{z_{Le}\ b_4\ a_4}$		$\alpha_{4B,a}$ α_{4B} $\alpha_{4B,i}$
Return vanes: z_R	Inlet: d_5, b_5, a_5, e_5	without	c_{5m}, c_{5u}, c_5, α_5	$\alpha_{5B,a}$ α_{5B} $\alpha_{5B,i}$
		$\tau_5 = \dfrac{1}{1 - \dfrac{z_R \cdot e_5}{\pi\, d_5 \sin\alpha_{5B}}}$	c_{5m}', c_{5u}, c_5', α_5'	
	Outlet: d_6, b_6, a_6, e_6	$\tau_6 = \dfrac{1}{1 - \dfrac{z_R e_6}{\pi\, d_6 \sin\alpha_{6B}}}$	c_{6m}', c_{6u}, c_6', α_6'	$\alpha_{6B,a}$ α_{6B} $\alpha_{6B,i}$
		without	c_{6m}, c_{6u}, c_6, α_6	

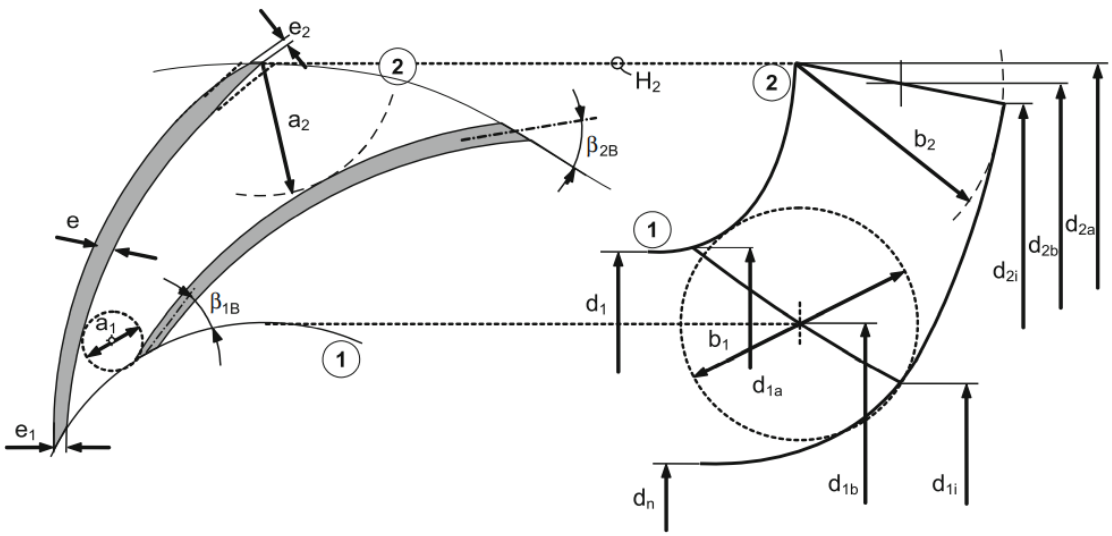
e2
2
H2
a2
β2B
e
β1B
a1
1
e1
d1
b1
d1a
d1b
d1i
dn
b2
d2i
d2b
d2a

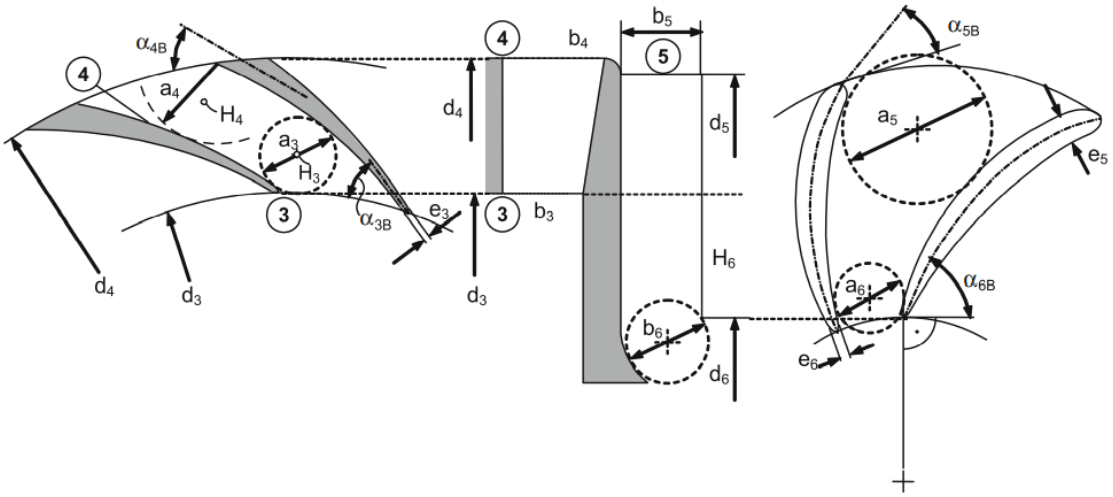
α4B
4
a4
H4
a3
H3
3
α3B
e3
d4
d3
b4
b5
5
d5
H6
b6
d6
α5B
a5
e5
a6
α6B
e6

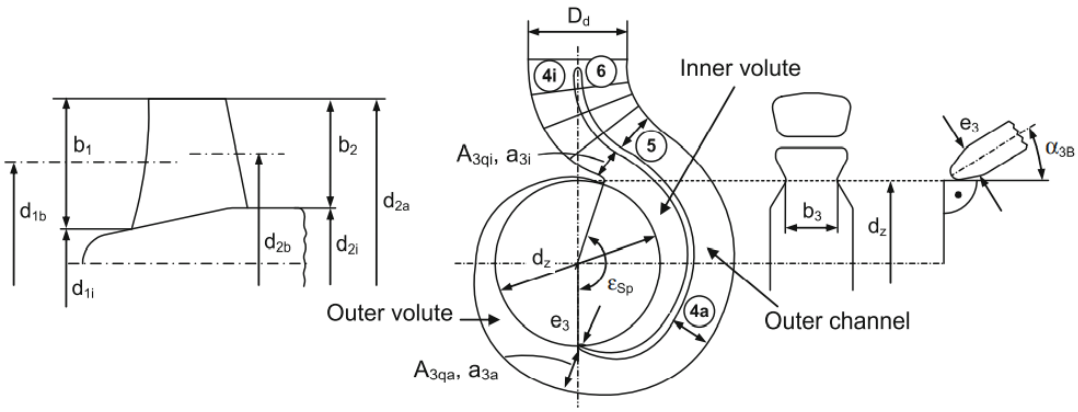
b1
b2
d1b
d2a
d2b
d2i
d1i
Dd
4i
6
Inner volute
A3qi, a3i
5
dz
εSp
Outer volute
e3
4a
A3qa, a3a
Outer channel
b3
α3B

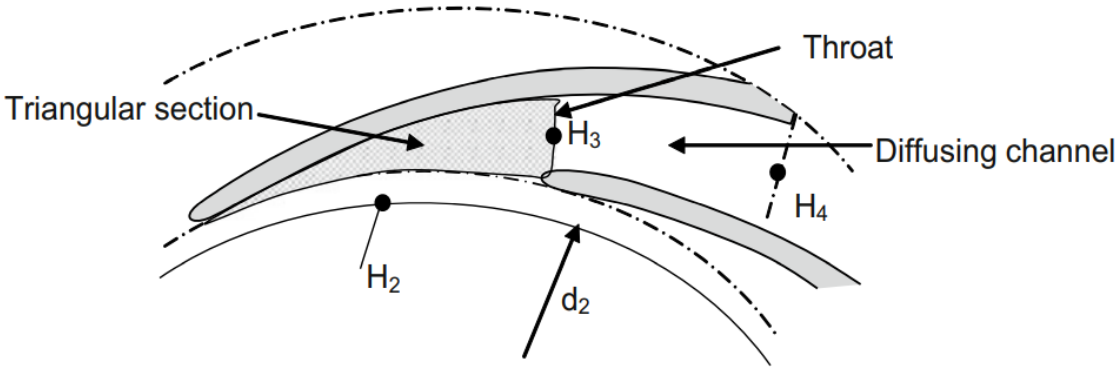

Impeller sidewall gaps and diffuser inlet geometry for multistage pumps

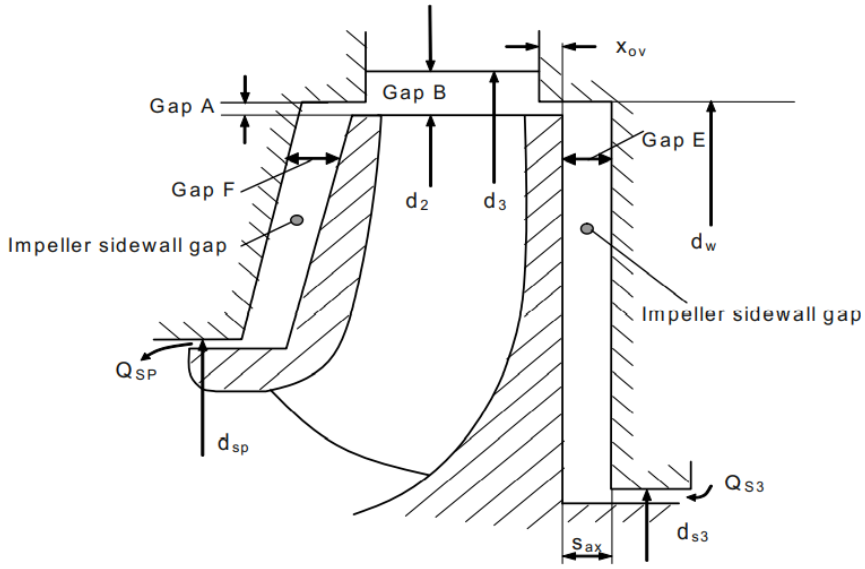

Diffuser inlet geometry with chamfer, for multistage pumps, Chap. 10 [61]

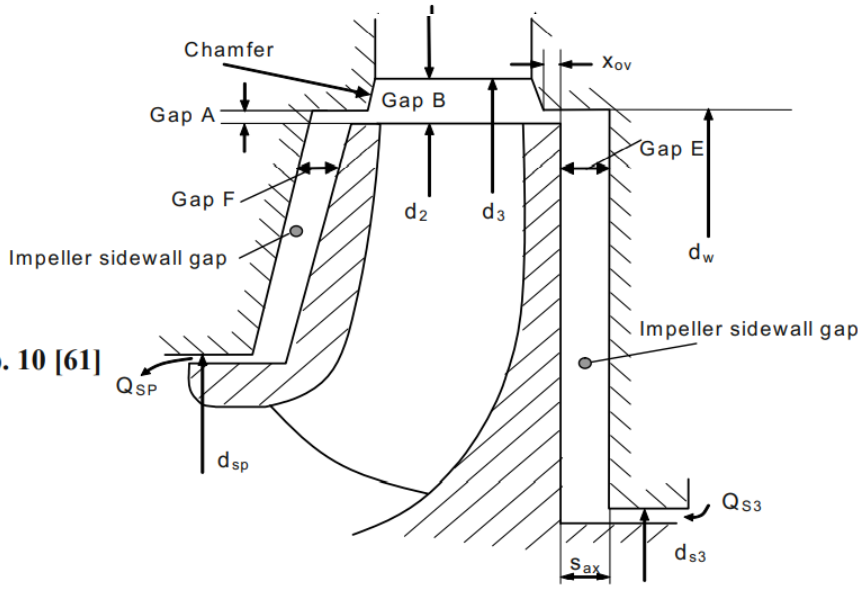

(Gülich, 2020)

Impeller design

Impeller design requires finite calculations and information on what the type of application it will be used for.

Quantities are gathered by the engineer off the customer. This will include the RPM speed of the required pump. The volumetric flow rate will be asked and flow rate through the impeller. The optimal head is needed. These boundary conditions along with the angle between direction of circumferential and absolute velocity. The specific speed can be determined. A hydraulic efficiency is assumed and some losses such as seal leakage and balance water are considered. A shaft that transmits the torque from the motor to the impeller is selected. The material and minimum shaft diameter must withstand the shear stress produced in the operation of the pump. The outer diameter of the impeller is calculated to achieve a stable Q-H curve. It must show good part load behaviour and function soundly with the specific speed. Noise, unbalancing and vibrations can give rise to instability. Selecting the number of blades for an impeller depends on numerous criteria

1. To reduce pressure pulsations and hydraulic excitation forces, impeller and diffuser blade numbers must be equal.
2. The blade load should be in an optimum range, to low and it will cause unnecessary high friction losses. If its to high the turbulent dissipation can increase and cause uneven flow distribution.
3. 8 or more blades can affect the Q-H curve and cause instability.
4. Less than 5 blades can cause an unsteady flow as the spacing between blades is increased.

The impeller inlet diameter should be dimensioned for minimum relative velocity at the impeller inlet. The blade inlet diameter at the inner streamline should be selected as to best improve the stability of Q-H curve. Impeller blade inlet angles are gotten by adding the incidence to the flow angle. Blade number, blade outlet angle and outlet width cannot be selected independently of one another. They must be matched so that the demanded head coefficient is achieved with a stable Q-H curve (Gülich, 2020). Outlet angles with blade numbers ranging from 5-8 are commonly selected in the range of 15°-45°. It should be optimised so to best achieve a stable Q-H curve. The thickness of the impeller blades is designed in terms of castability and mechanical strength. It is dependent on the max head per stage and the tip clearance speed. Corrosion effects can sometimes limit the alternating stresses. Blade thickness and alternating allowable stress are selected accordingly. The blade leading edge generates local velocities and intense low-pressure peaks. The geometry should be selected as best not to affect the efficiency. Blade trailing edge profiles are tampered towards the trailing edge to roughly half of the blade thickness. Hydrodynamic loading can range without a noticeable affect on the efficiency and hydraulic forces. The throat area accommodates the deacceleration of the relative velocity vector and therefore must not be too high to counter act any premature inlet recirculation. The distance between blades at the outlet must match the outlet angle. Blade design defines the shape of the blade from the inlet to the outer diameter of the impeller.

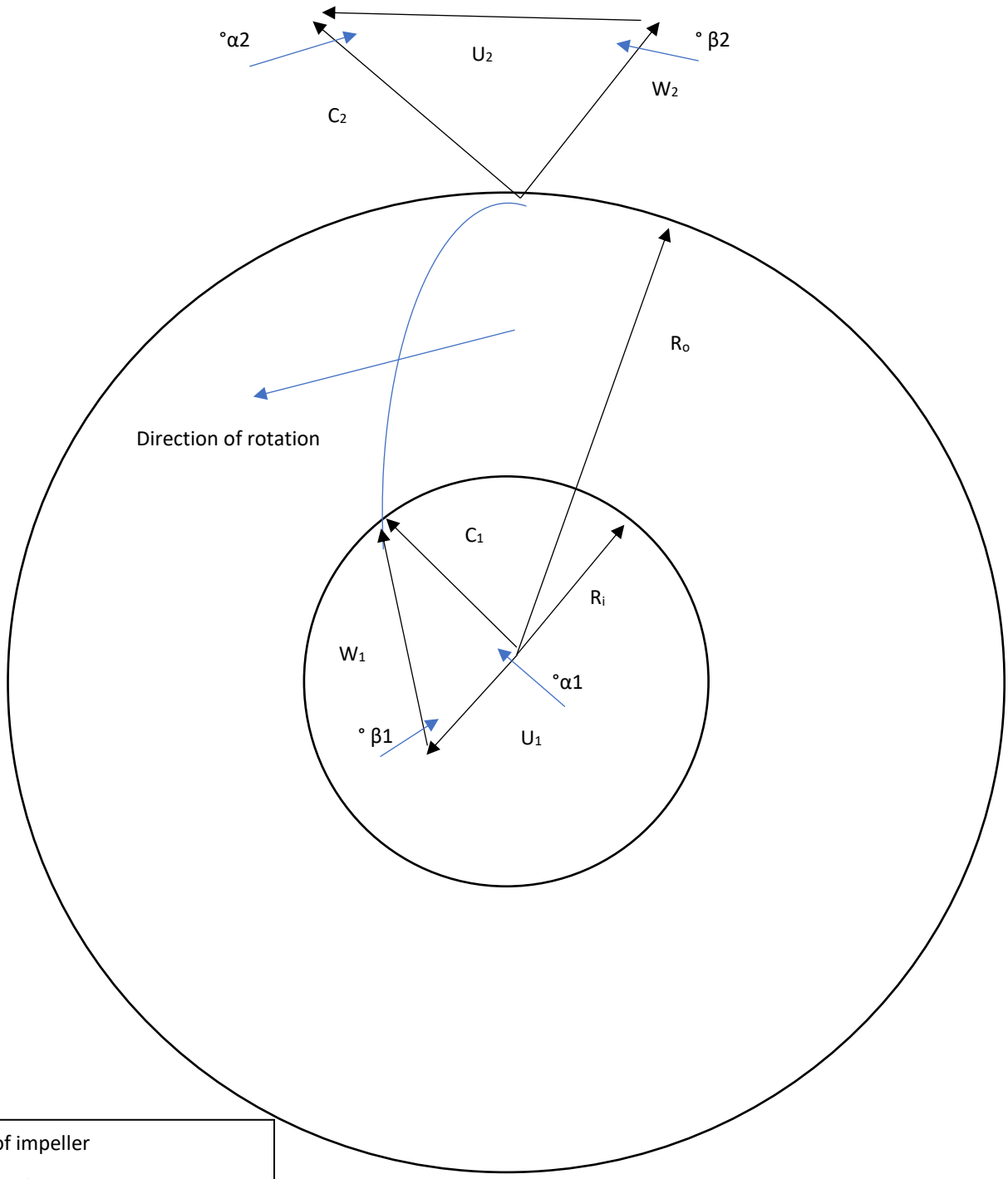

R – Radius of impeller

U – tangential/circumferential velocity

C – absolute velocity

W – relative velocity

α1 ,β2 – angle between tangential and absolute vectors

α2 , β1 – angle between relative and tangential velocity vectors

Velocity triangles

Vectors can be used to describe the flow of a fluid particle through the impeller. 3 vectors make up the velocity triangle at the inlet and outlet sections of the impeller and can be described in terms of a tangential velocity, absolute velocity, and relative velocity of the fluid. these vectors represent the magnitudes and directions of the flow. For this impeller, the **absolute velocity** is **C**, the **tangential velocity** is **U**, this is the blade velocity, and the **relative velocity** is represented by **W**.

The angle α is the absolute flow angle between the tangential and absolute vectors at the impeller inlet. β represents the angle in the relative frame reference.

The circumferential speed $u = \omega \times r = \pi \times d \times \frac{n}{60} = \pi \times d \times n^s \ (n \ in \ rpm \ , n^s \ in \ \mathrm{s} \ )$

The flow into the impeller is three-dimensional so the velocities are described in the meridional plane and the tangential plane. The meridional section is a view through the impeller axis.

Inlet

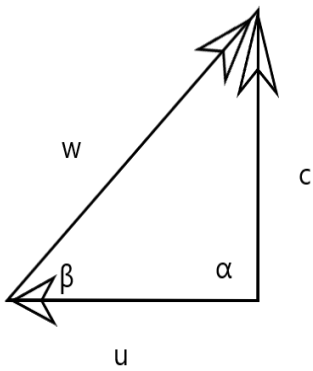

Figure 10 Velocity Triangle

For a radial impeller like the KSB-Etanorm pump the area can be calculated as:

$$A = 2\pi \times r \times b \ (\mathrm{m}^2)$$

Where:

r = radius of the inlet edge

b = the blade hight in the inlet

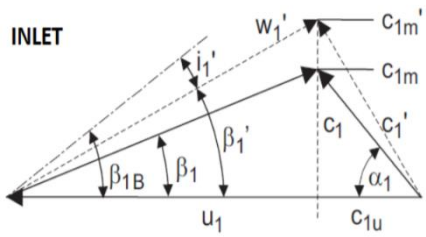

Figure 11 Velocity triangle at impeller inlet (Gülich, 2020)

The qualities selected for determining Velocity triangle at inlet are:

n = rotational speed(rpm)

Q_{LA} = flow rate through impeller

d_n = hub diameter

$d_{1,2}$ = inside diameter and outside diameter of impeller

b_2 = impeller outlet width

Z_{LA} = number of impeller vanes/blades

α = angle between direction of circumferential and absolute velocity

e = vane thickness

η_H = hydraulic efficiency

Taking leakage and losses or the flow as zero, the volumetric flow must go through the impeller,

$$Qimpeller = Qpump.$$

The Circumferential Speed U is given.

$$U = \pi\, d_1 \frac{n}{60}\ m/s$$

Meridional component of absolute velocity at the entrance of impeller is given.

$$C_m = \frac{Q_{impeller}}{A}\ m/s$$

The circumferential component of absolute velocity is.

$$C_u = \frac{C_m}{\tan\alpha}\ m/s$$

The relative velocity is given.

$$W = \sqrt{Cm^2 + (u - C_u)^2}\ m/s$$

With the impeller operating at a speed of rotation of 2965 rpm and a flow rate of 240.0 m^3/h. Fluid Inner diameter of impeller 92mm and outer diameter of 174mm. Blade height = 0.024 m and α = 90° for non-swirling inflow (Gulich, 2020). Impeller outlet width 31mm.

$$Circumferential\ speed : U = \pi * 0.092 * \frac{2965}{60} = 14.28\, m/s$$

$$Meridional\ Component :\ C_m = \frac{240}{0.006} = \frac{40{,}000}{3600} = 11.1 m/s$$

$$Circumferential\ component :\ C_u = \frac{11.1}{\tan(90)} = -5.56\, m/s$$

$$Relative\ Velocity\ W = \sqrt{(11.1)^2 + (14.28 - (-5.56))^2} = 22.73\, m/s$$

$$°\beta = \tan^{-1}\frac{11.1}{14.28 - (-5.56)} = 29.22°$$

Outlet

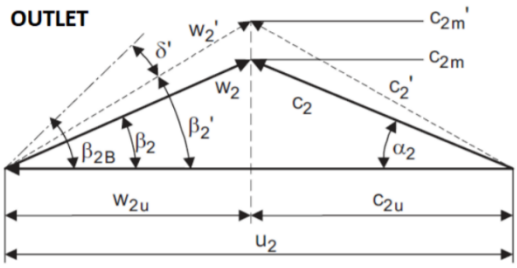

Figure 12 Outlet velocity triangle (Gülich, 2020)

For a radial impeller used in the Etanorm pump the outlet area can be described with:

$$A_2 = 2\pi \times r_2 \times b_2 \text{ (m}^2\text{)}$$

The meridional velocity at the impeller outlet can be described in the same way as the flow in the inlet.

$$C_2m = \frac{Q_{impeller}}{A_2} \ m/s$$

The tangential velocity denoted as U_2

$$U_2 = \pi * d_2 * \frac{n}{60} \ m/s$$

The angle β is the same as the blade angle used for the inlet. Relative velocity can be found:

$$W_{2u} = U_2 - C_2m$$

$$W_2 = \sqrt{C_2m^2 + W_2u^2}$$

Using the parameters for the pump set out the outlet triangle can be calculated.

$$A_2 = 2\pi * 0.087 * 0.021 = 0.011 \ m^2$$

$$Meridonal\ Velocity\ component: \ C_2m = \frac{240}{0.011} = \frac{21.8}{3600} = 6.06 \ m/s$$

$$Tangential\ outlet\ velocity: \ U_2 = \pi * 0.174 * \frac{2965}{60} = 27.01 \ m/s$$

$$Relative\ Velocity: \ W_{2u} = 6.06 - 27.01 = -20.94$$

$$W_2 = \sqrt{(21.8)^2 + (-20.94)^2} = 30.22 \ m/s$$

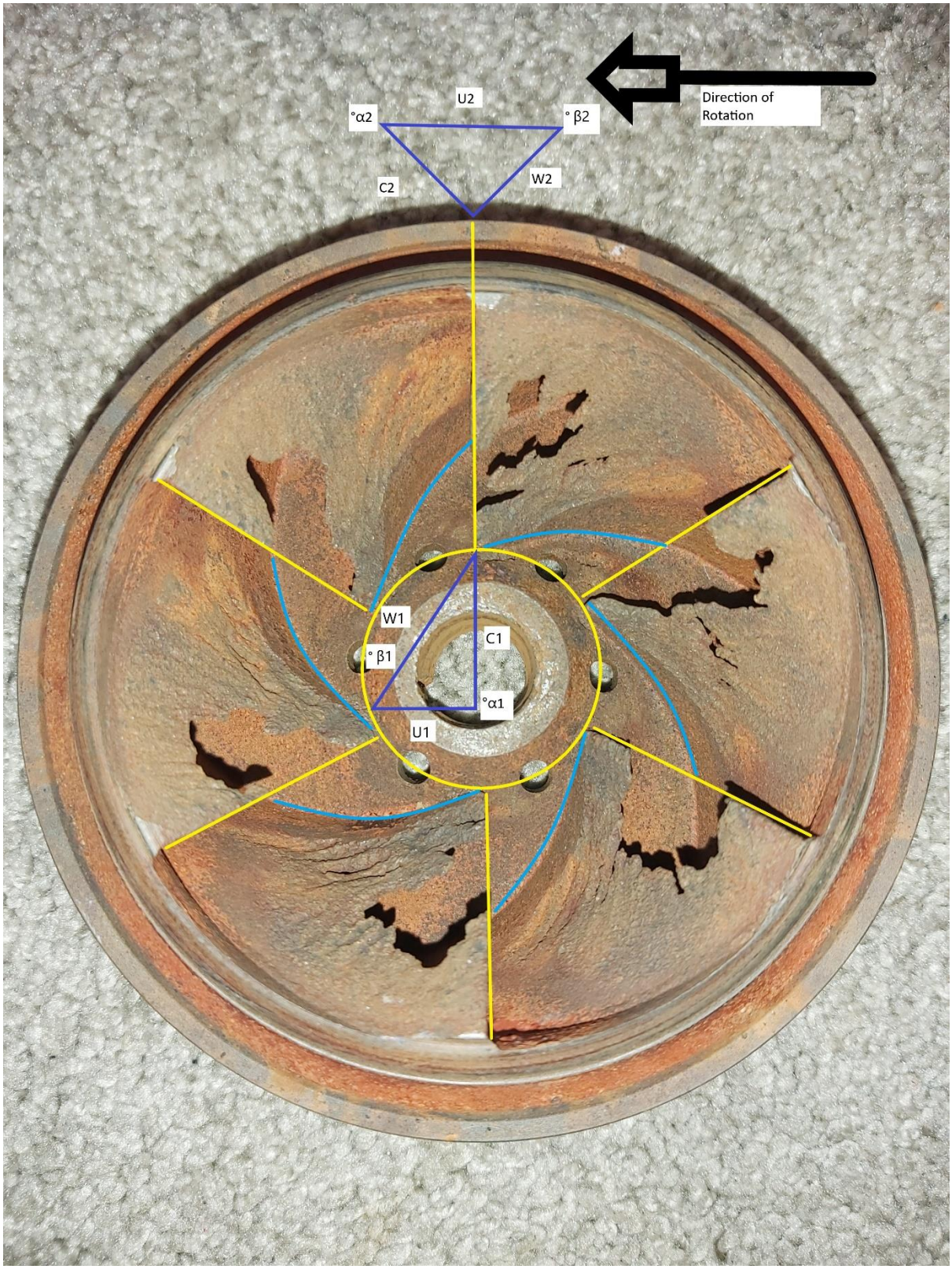

Figure 13 Impeller with velocity triangles

Impeller

Newtons 2nd law of motion states that a body will remain in uniform motion (unless at rest) if it is not acted upon by an external force to change its condition. For a fluid particle to follow a curved path, like a curved vane on an impeller, a force must be exerted. As a fluid particle enters the rotating closed impeller, angular momentum will cause a centrifugal force to be exerted on that particle causing it to move along a circular path directed radially outwards. Pressure in the curved channel increases from the inside to the outside in the direction that the fluid particle follows. The pressure gradient imparts the necessary centrifugal acceleration that allows motion along the curved vanes. Flow velocity near the outer walls of the impeller casing is lower than that in the centre of the channel, but the pressure gradient that is perpendicular to the streamlines is caused by the main flow entering the pump. An impeller is mounted onto a shaft that is driven by a coupling through a motor.

The impeller can be described by the hub, rear shroud, and vanes, or blades. It is the impeller that transfers energy to the fluid to transport and accelerate it. It causes static pressure to be increased because of the curved path that a mass must follow.

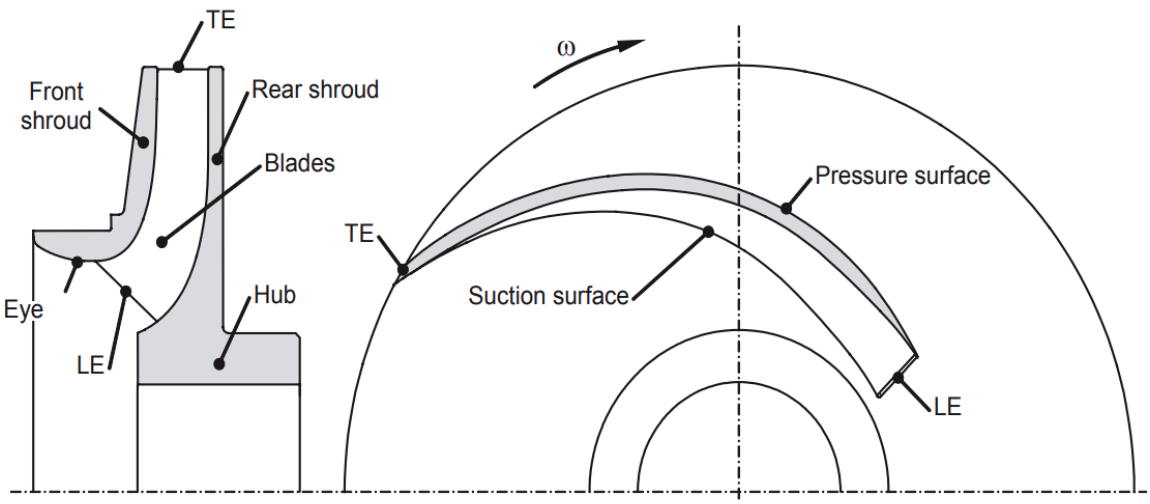

Figure 14 Merdional section and plain view of an impeller (Gülich, 2020)

The leading face of the blade, or pressure surface experiences the highest pressure. The angular rotor velocity ω indicates the direction of rotation. The suction surface on the opposite side of the blade experiences a lower pressure.

Euler's pump equation

The Euler equations represent the non-viscous terms of the Navier-Stokes equations and is the most relevant expression in connection to pump design. The Euler Equations connect specific work and the geometry and velocities in the impeller. the equation is based off concepts of conservation of angular momentum and conservation of energy. Euler's equations do not predict losses but determine the balance equations for the pump's impeller using a control volume. It captures the balance of the centrifugal, Coriolis and pressure forces, except for the impact of shear stresses and boundary layers. Boundary layers play an essential role, such as local flow separation and secondary flow which are dominated by boundary layer flow. Euler's Equations can be used to determine velocity triangles associated with the pump. These do not coincide with previous methods of calculation.

The Euler Turbomachinery Equations are:

$$Shaft\ torque = T_{Shaft} = \rho\, Q\, (R_2 V_{t2} - R_1 V_{t1})$$

$$Water\ Horsepower = P_w = \omega * T_{Shaft} = \rho\, Q\, (U_2 V_{t2} - U_1 V_{t1})$$

$$Pump\ Head = H = \frac{P_w}{\rho g Q} = \frac{(U_2 V_{t2} - U_1 V_{t1})}{g}$$

Where:

- r_1 and r_2 are the diameters of the impeller at the inlet and outlet, respectively.
- u_1 and u_2 are the absolute velocity of the impeller ($U_1 = r_1 * \omega$) at the inlet and outlet, respectively.
- V_{t1} and V_{t2} are the tangential velocity of the flow at the inlet and outlet, respectively.

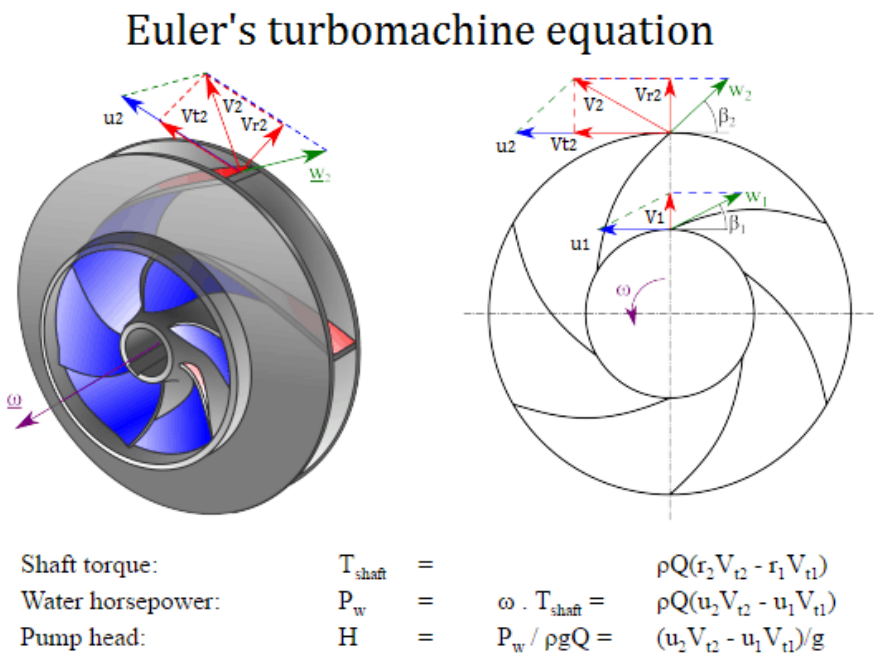

Figure 15 Euler's turbomachine equation (https://www.nuclear-power.net/nuclear-engineering/fluid-dynamics/centrifugal-pumps/eulers-turbomachine-equations/)

Using the following data for the KSB centrifugal pump

- Diameters of the impeller at the inlet and outlet
  - r_1 = 0.092m
  - r_2 = 0.174m
- Speed = 2965 rpm (revolutions per minute)
- The blade angle at in let β_1 = 49.4°
- The blade angle at outlet β_2 = 49.4°
- Blade widths at the inlet and outlet are 0.031m

The radial velocity of the flow at the outlet is equal to zero, as fluid enters exactly normal to the impeller.

$$V_{r1} = U_1 \tan 49.4 = \omega\, r_1 \tan 49.4 = 2\pi * \frac{2965}{60} * 0.092 * \tan 49.9 = 33.92\, m/s$$

Radial components of flow determine how much the volume flow rate enters the impeller.

$$Q = 2\pi * r_1 * b_1 * V_{r1} = 2\pi * 0.092 * 0.031 * 33.92 = 0.607 \frac{m^3}{s}$$

The outlet tangential flow velocity is required to calculate the water horsepower. The outlet radial flow velocity follows from conversation of Q:

$$Q = 2\pi * r_2 * b_2 * V_{r2}$$

$$V_{r2} = \frac{Q}{2\pi * r_2 * b_2}$$

$$V_{r2} = \frac{0.607}{2\pi * 0.174 * 0.031}$$

$$V_{r2} = 17.91\, m/s$$

From figure…. The outlet angle β_2 can be represented.

$$\cot \beta_2 = \frac{u_2 - V_{t2}}{V_{r2}}$$

And the outlet tangential flow velocity V_{t2} is:

$$V_{t2} = U_2 - V_{r2} * cot49.9 = \omega * r_2 - V_{r2} * cot49.9 = 2\pi * \frac{2965}{60} * 0.174 - 17.91 * 0.842 = 38.9 m/s$$

The water horsepower can be calculated next:

$$P_w = \rho * Q * u_2 * V_{t2} = 1000 \frac{kg}{m^3} * 0.607 \frac{m^3}{s} * 54.02 \frac{m}{s} * 38.9 \frac{m}{s} = 1.275 MW$$

And pump head is:

$$H \approx \frac{P_w}{\rho\, g\, Q} = \frac{1275000}{1000 * 9.81 * 0.607} = 214.11\, m$$

Euler's turbomachinery equations are used to predict the impact of changing the impeller geometry in relation to the head.

(contributors, 2021)

Performance characteristics

Theoretical analysis of pumps and impellers can give qualitative results and it is most important than a pumps true performance can only be characterized by extensive hydraulic testing. Industry uses Q-H curves to characterise pumps and impellers.

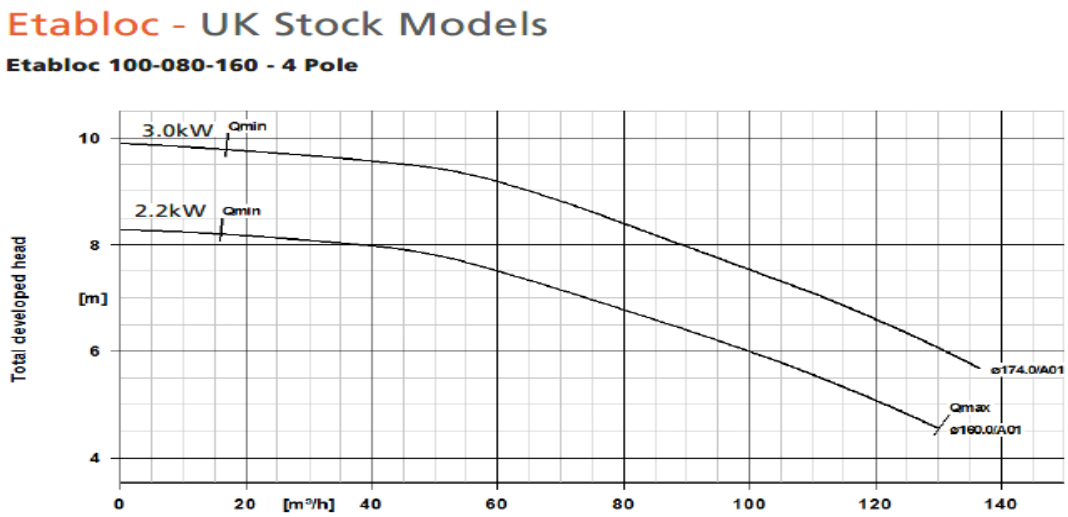

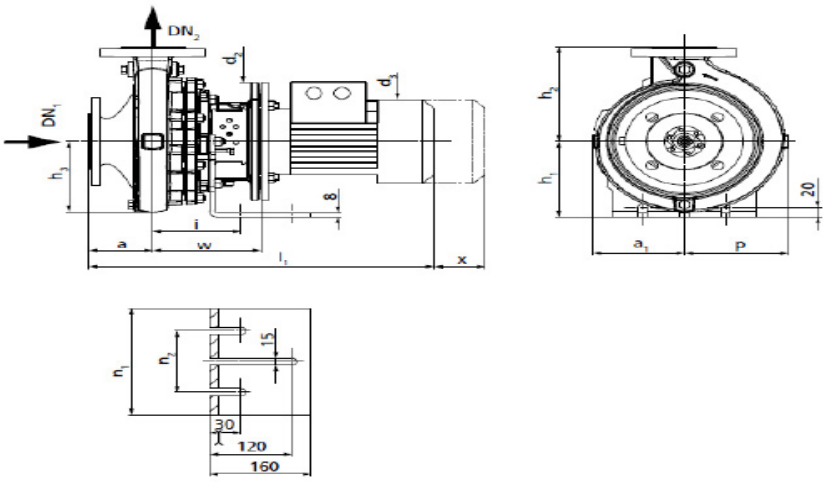

Size		DN_1	DN_2	a	a_1	d_2	d_3	h_1	h_2	h_3	i	l_1	n_1	n_2	p	w	x
Pump	Impeller [mm]	[mm]															
100-080-160	160	100	80	125	138	250	213	160	225	153	118	685	225	130	174	170	140
100-080-160	174	100	80	125	138	250	213	160	225	153	118	685	225	130	174	170	140

Figure 16 Q-H curve chart for KSB pump

For the 2.2kW model, $Q_{min} = \frac{18m^3}{h}$ producing a total developed head of 8.3 m. $Q_{max} = \frac{130m^3}{h}$ producing a total developed head of 4.25m. The max pump head is determined by the outside diameter of the impeller and shaft angular velocity. The head decreases as the volumetric flow rate increases. When the pump is operating at constant angular velocity, the system head increases on the flowing stream that causes a reduction in the volumetric flow rate. The relationship between head and volumetric flow rate is based on the following characteristics:

- Power supplied to the pump via the motor
- Shafts angular velocity
- Type and diameter of the impeller
- The fluid density and viscosity being pumped

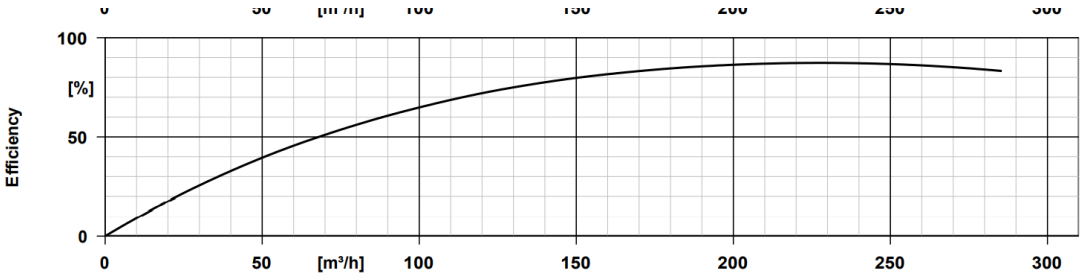

Figure 17 KSB pump Efficiency

The pump efficiency is the ratio of the water horsepower delivered by the pump and the break horsepower delivered to the pump shaft. The max efficiency the KSB Etanorm low pressure pump can reach is 87.2% when delivering between 200-250 $\frac{m^3}{h}$. The energy is determined by the height lifted and friction in the flow paths.

It can be defined as:

$$P = BHP = \frac{\rho g Q H}{\eta} = \frac{1000 * 9.81 * 0.607 * 7}{87.2} = 478\ W$$

This shows that 478W is the input power required to give head of 7m at a volumetric flow rate of 0.607$\frac{m^3}{s}$.

The best efficiency point (BEP) occurs at a certain flow rate and the efficiency has a maximum value. The BEP is characterised by flow rate, head, power, and net positive suction head (NPSH).

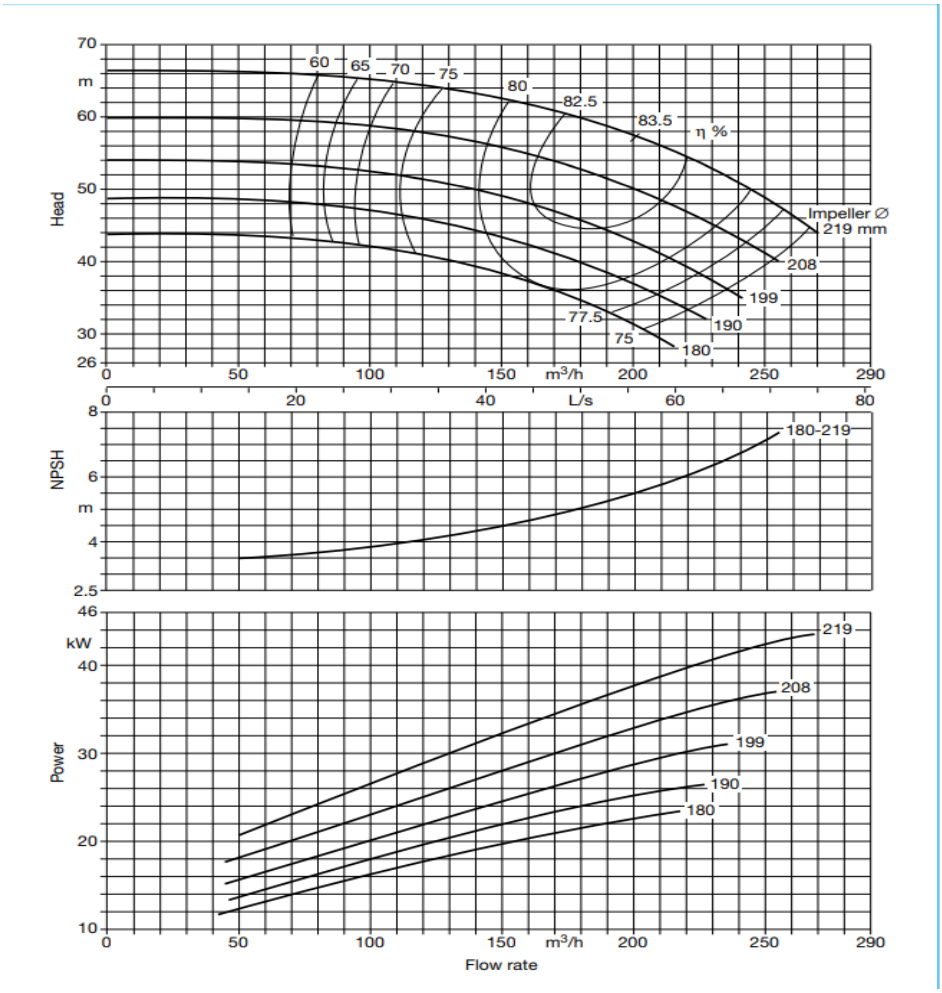

Figure 18 characteristics of KSB pump

The net positive suction head (NPSH) is the difference between suction pressure and saturation pressure of the fluid, expressed in terms of fluid height. It is a measure of the fluid saturation conditions. Cavitation occurs when pressure is lowered or drops on the suction side. The violent collapse of the air bubbles can send shock waves throughout the fluid and can crave material from the impeller. it can also create a noise described as ''pumping gravel''. When the inlet pressure drops, these cavitation bubbles develop and not to soon afterwards, the effects are seen in the hydraulic performance of the pump and impeller. a small number of cavitation bubbles may be acceptable for the pump to operate economically. Resistance is sought by selecting a more suitable and often more expensive material to manufacture the impeller.

The performance of the impeller and pump are limited by several factors. Mechanical aspects and hydraulics require attention. When looking at impeller design the maximum discharge pressure and operating temperatures of the working fluids influence the operating limits. The shaft must be designed to support the impeller operating at a high-speed rotation. The shaft and impeller material must be constructed of suitable material to avoid corrosion and minimise the impact of wear over time. It must keep in mind their strength and temperature limits. Shaft length and material are selected with the impeller joint in mind. The shaft may connect to the impeller with a keyhole. Sealing methods and cooling requirements are analysed before mass manufacturing begins. The impeller must be tested for balance and vibrations noises. An unbalanced impeller can have devastating effects on the performance and over health of the pump. It could lead to dryer problems when used in its designated role in industry.

At times, a Head or flow rate might have to be reduced. Turning down the impeller can help achieve this. This involves reducing the outside diameter of the impeller. impellers made from stainless steel sheet metal and single vane impeller cannot be turned down.

Stresses and strains within impeller - FEA

The viscosity of a fluid is the property by which it resists shear. The KSB impeller is a double-sided closed channel impeller meaning the working fluid is passed out if the impeller between a wall and plate.

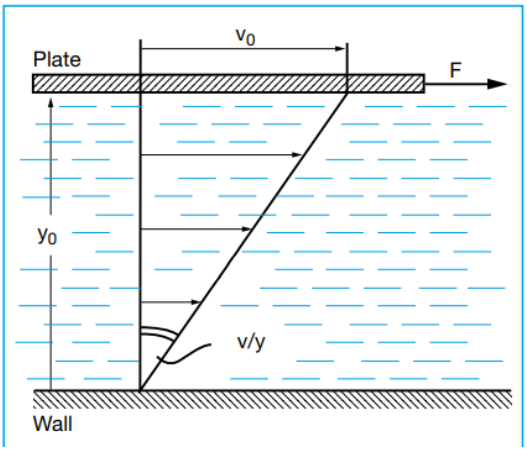

Figure 19 Newtonian shear distribution

$$F = Towing\ force$$

$$v0 = Towing\ speed$$

$$y0 = distance\ to\ wall$$

$$\frac{\partial v}{\partial y} = Rate\ of\ shear$$

The viscosity and kinematic viscosity of Water at 1 atm and 20°C

$\mu\ \frac{Kg}{m * s}$	$Ratio\ \frac{\mu}{\mu}$	$\rho\ \frac{kg}{m^3}$	$\nu\ \frac{m^2}{s}$	$Ratio\ \frac{\nu}{\nu}$
1.0 E-3	114	998	1.01 E-6	8.7

Table 2 Fluid Properties

A fluid is moved over a plate with wetted surface area A, with speed V parallel to the stationary wall. The movement requires that resistance be overcome, which is expressed as shear stress $\tau = \frac{F}{A}$. The parameters v0 and y0 are combined to give the shear gradient v0/y0.

$$\tau = \frac{\partial \theta}{\partial t}$$

The fluid viscosity no matter how small causes a shear stress τ at the walls and every distance from the wall. This is generalised as the rate of shear; change of velocity per change of distance.

The importance of fluid viscosity and shear values will tell the engineer the material or max values the impeller can stand up to. It is also important to know for operating condition.

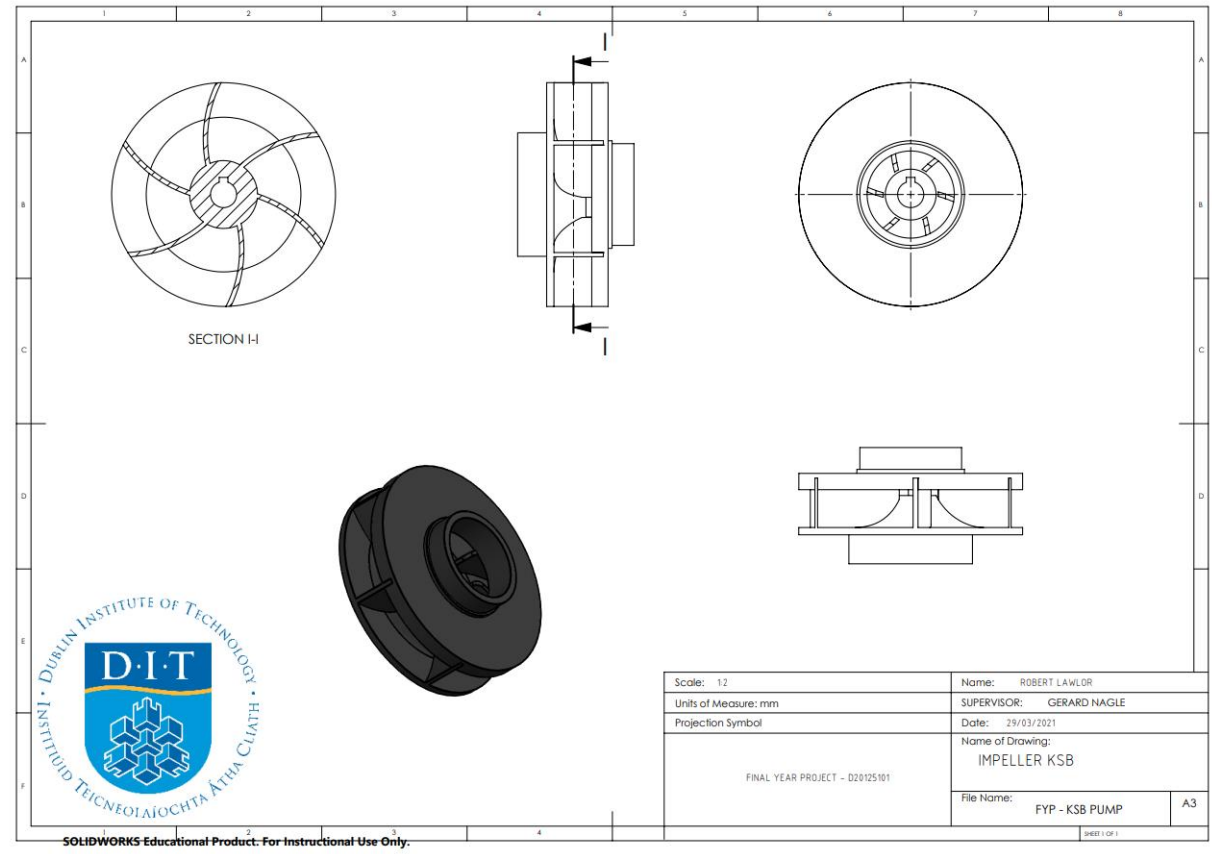

Figure 20 KSB impeller modelled on SOLIDWORKS

Property	Value	Units
Elastic Modulus	6.61781e+10	N/m^2
Poisson's Ratio	0.27	N/A
Shear Modulus	5e+10	N/m^2
Mass Density	7200	kg/m^3
Tensile Strength	151658000	N/m^2
Compressive Strength	572165000	N/m^2
Yield Strength		N/m^2
Thermal Expansion Coefficient	1.2e-05	/K
Thermal Conductivity	45	W/(m·K)
Specific Heat	510	J/(kg·K)
Material Damping Ratio		N/A

Figure 21 Grey Cast Iron material properties

FEA Simulations

The structural and thermal behaviour and properties of centrifugal pumps is important to the designer. The behaviour of these properties can estimate the lifespan of components such a bearings or seals. To make the pump operate at an efficient rate, it is important to test the components to see where stress/strain may take place and adjust design accordingly. Individual parts or assemblies can be analysed using Finite Element Analysis. This tool offers solutions to engineering problems with linear and nonlinear behaviour at steady or transient state conditions.

FEA can be used to locate sources of vibrations that could cause noise or mechanical issues. Imbalance and misalignment are major issues in pump manufacturing and operation. Although the source of vibration can be alien to the pump, FEA can help identify natural frequency sources from the material and components inside. The component assemble of the pump can be analysed for load combinations and evaluated for gap clearances. The weight of the pump and components can be analysed by using different materials. This could be of benefit to cost production and ease of transport or installation.

Model Information

Model name: PUMP IMPELLER
Current Configuration: Default

Solid Bodies

Document Name and Reference	Treated As	Volumetric Properties	Document Path/Date Modified
Cut-Extrude1 	Solid Body	Mass:2.62094 kg Volume:0.00036402 m^3 Density:7,199.99 kg/m^3 Weight:25.6852 N	C:\Users\lawlo\OneDrive\Desktop\Y3\FYP\Thesis\tutorial SW\PUMP IMPELLER.SLDPRT Apr 20 14:52:59 2021

Material Properties

Model Reference	Properties	Components
	Name: Gray Cast Iron Model type: Linear Elastic Isotropic Default failure criterion: Mohr-Coulomb Stress Tensile strength: 1.51658e+08 N/m^2 Compressive strength: 5.72165e+08 N/m^2 Elastic modulus: 6.61781e+10 N/m^2 Poisson's ratio: 0.27 Mass density: 7,200 kg/m^3 Shear modulus: 5e+10 N/m^2 Thermal expansion coefficient: 1.2e-05 /Kelvin	SolidBody 1(Cut-Extrude1)(PUMP IMPELLER)
Curve Data:N/A		

Loads and Fixtures

Fixture name	Fixture Image	Fixture Details
Fixed-1	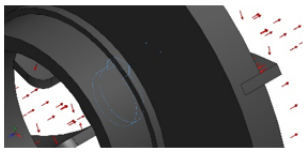	Entities: 4 face(s) Type: Fixed Geometry

Resultant Forces

Components	X	Y	Z	Resultant
Reaction force(N)	5.66981e-05	7.4583e-05	0.000329353	0.000342419
Reaction Moment(N.m)	0	0	0	0

Load name	Load Image	Load Details
Pressure-1	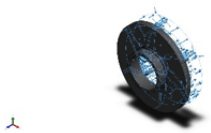	Entities: 28 face(s) Type: Normal to selected face Value: 0.06 Units: N/m^2 Phase Angle: 0 Units: deg

Mesh information - Details

Total Nodes	18674
Total Elements	9961
Maximum Aspect Ratio	14.334
% of elements with Aspect Ratio < 3	92.4
Percentage of elements with Aspect Ratio > 10	0.231
Percentage of distorted elements	0
Time to complete mesh(hh;mm;ss):	00:00:02
Computer name:	

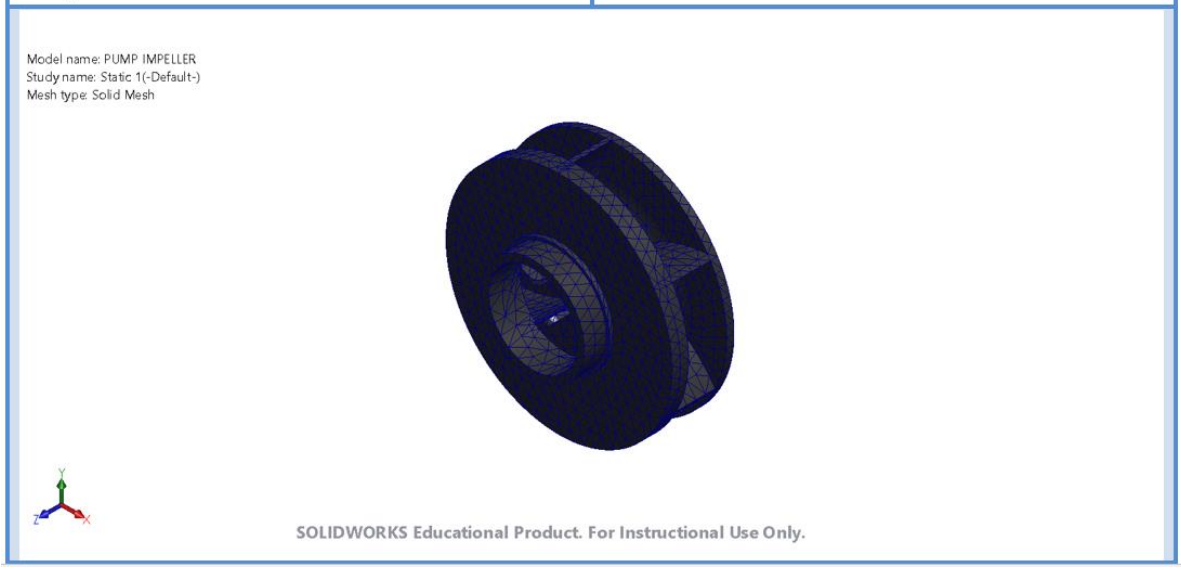

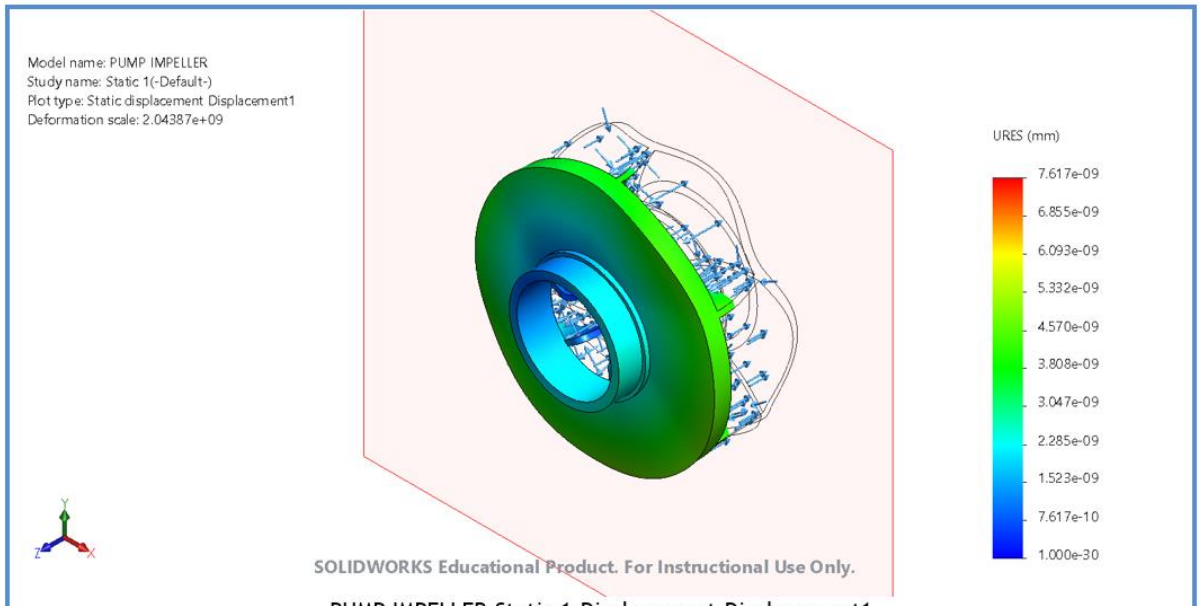

PUMP IMPELLER-Static 1-Displacement-Displacement1

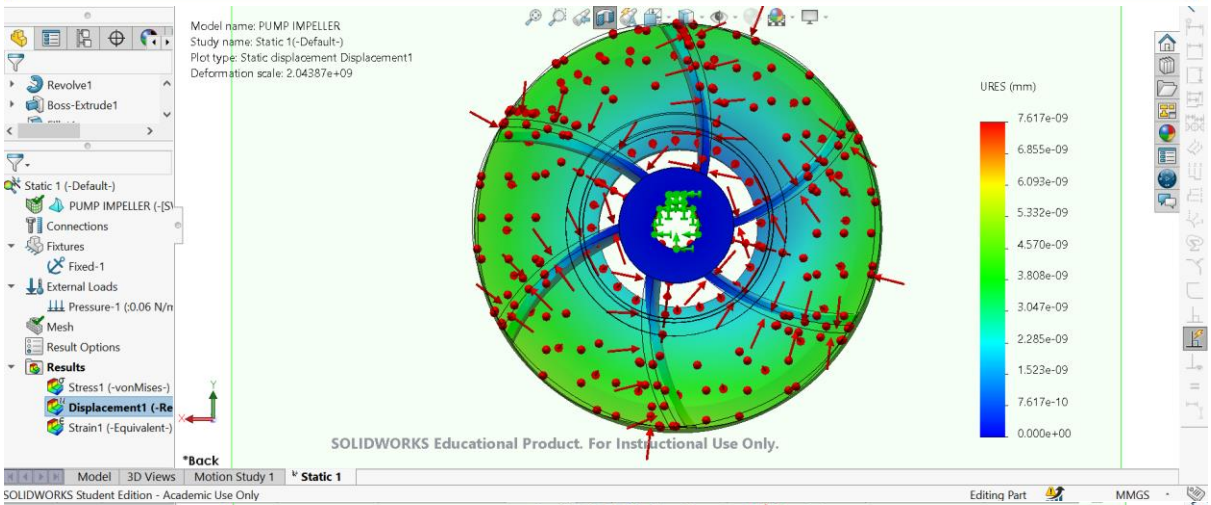

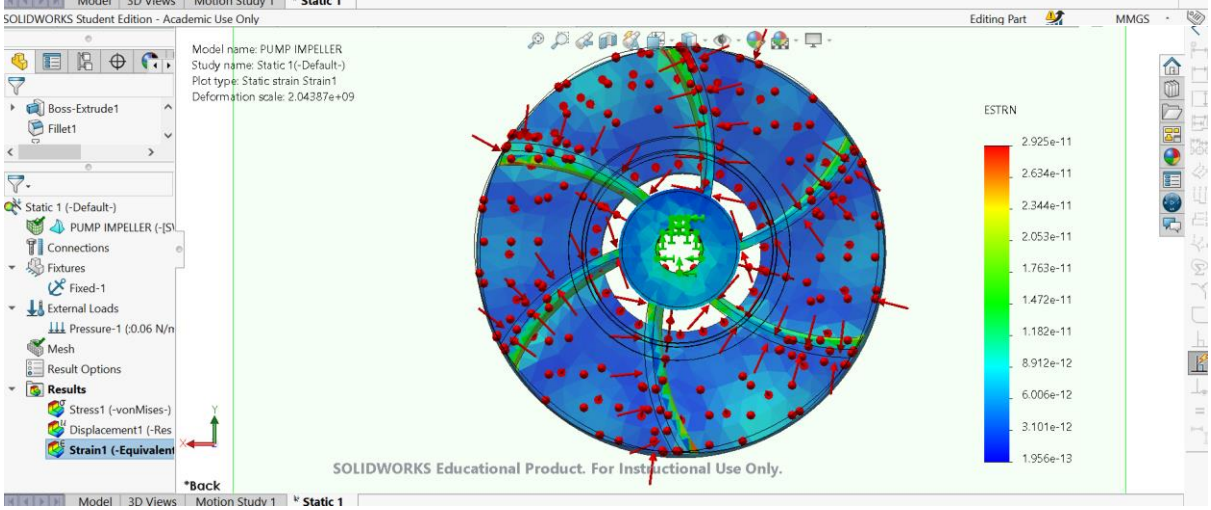

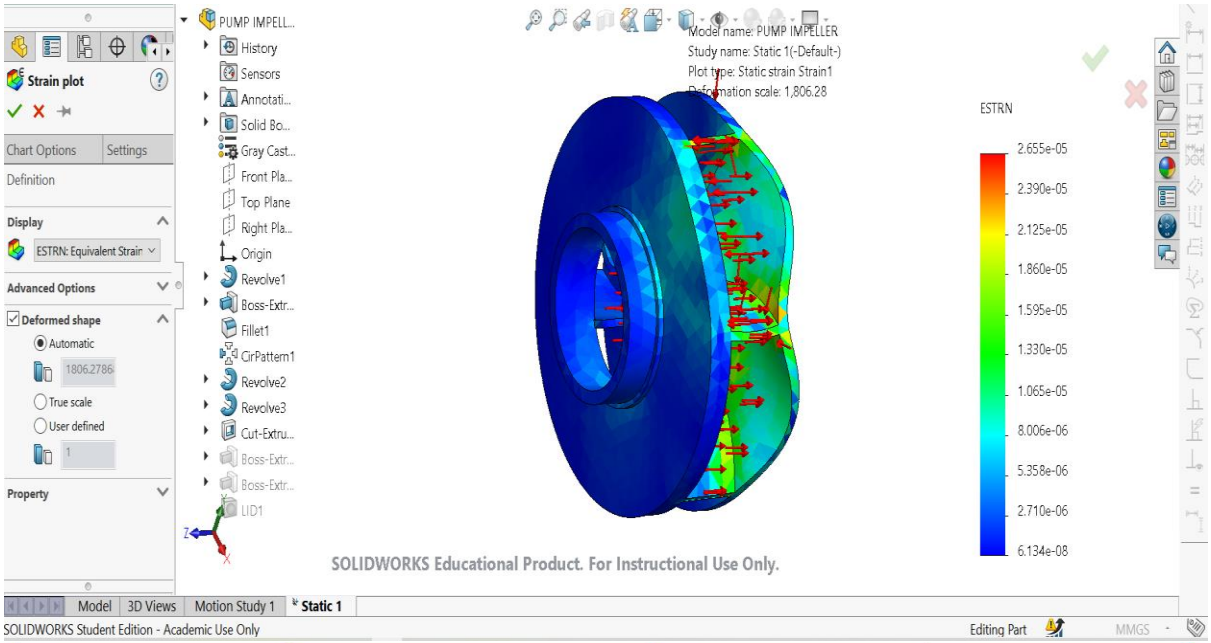

Name	Type	Min	Max
Strain1	ESTRN: Equivalent Strain	1.956e-13 Element: 5214	2.925e-11 Element: 5017

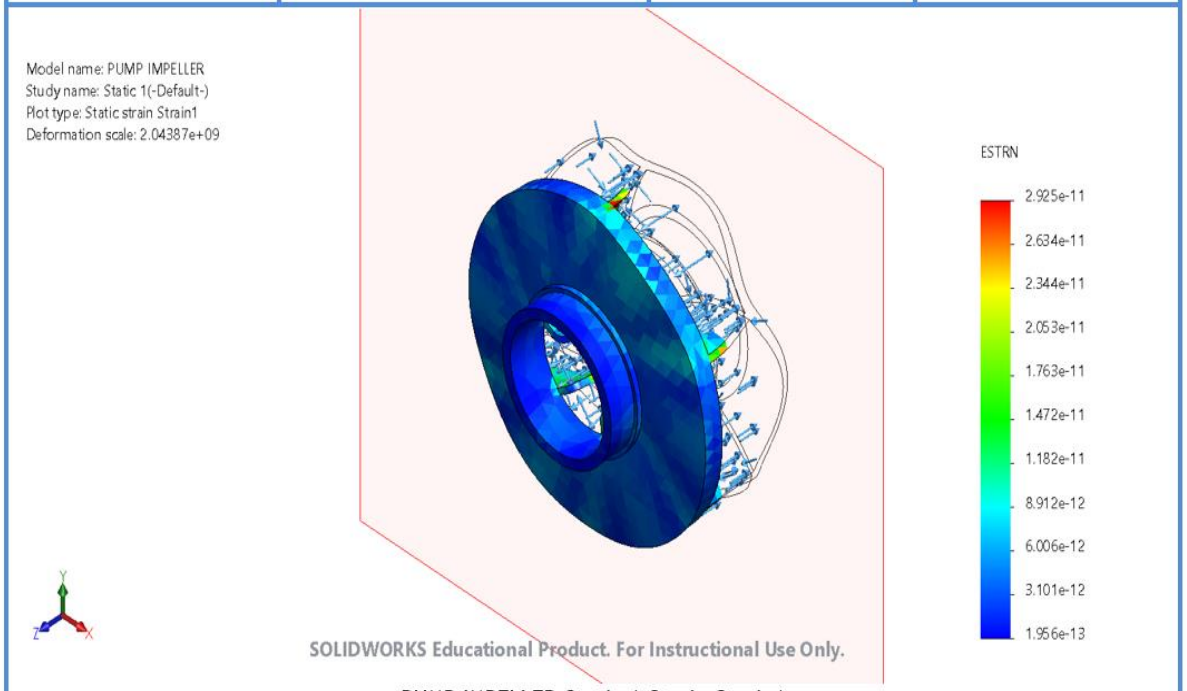

PUMP IMPELLER-Static 1-Strain-Strain1

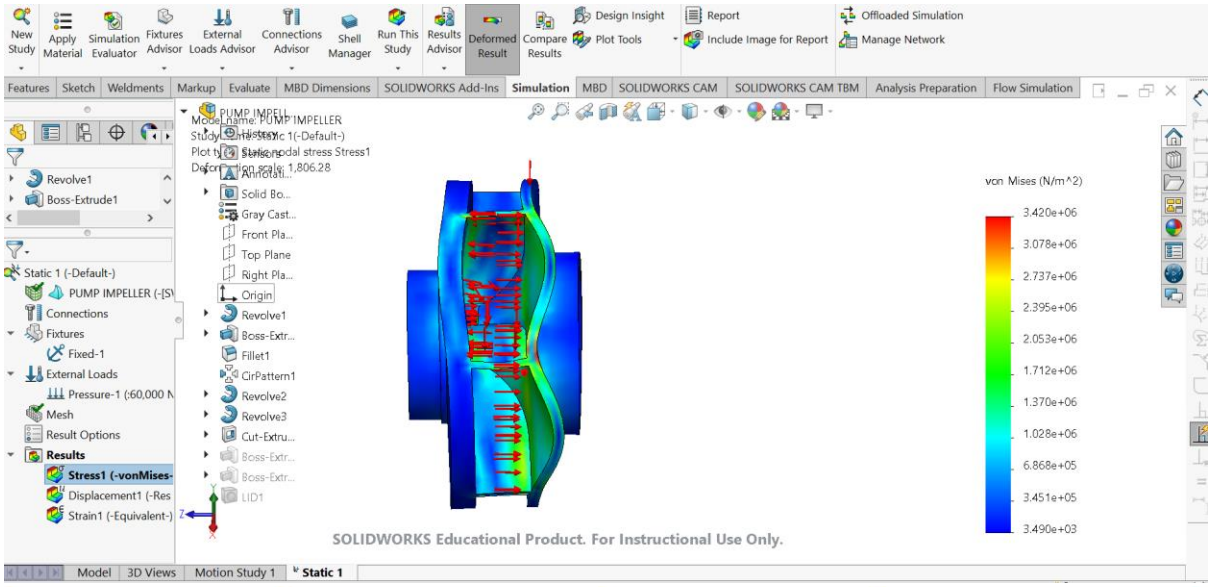

Name	Type	Min	Max
Stress1	VON: von Mises Stress	1.124e-02N/m^2 Node: 2352	3.544e+00N/m^2 Node: 13931

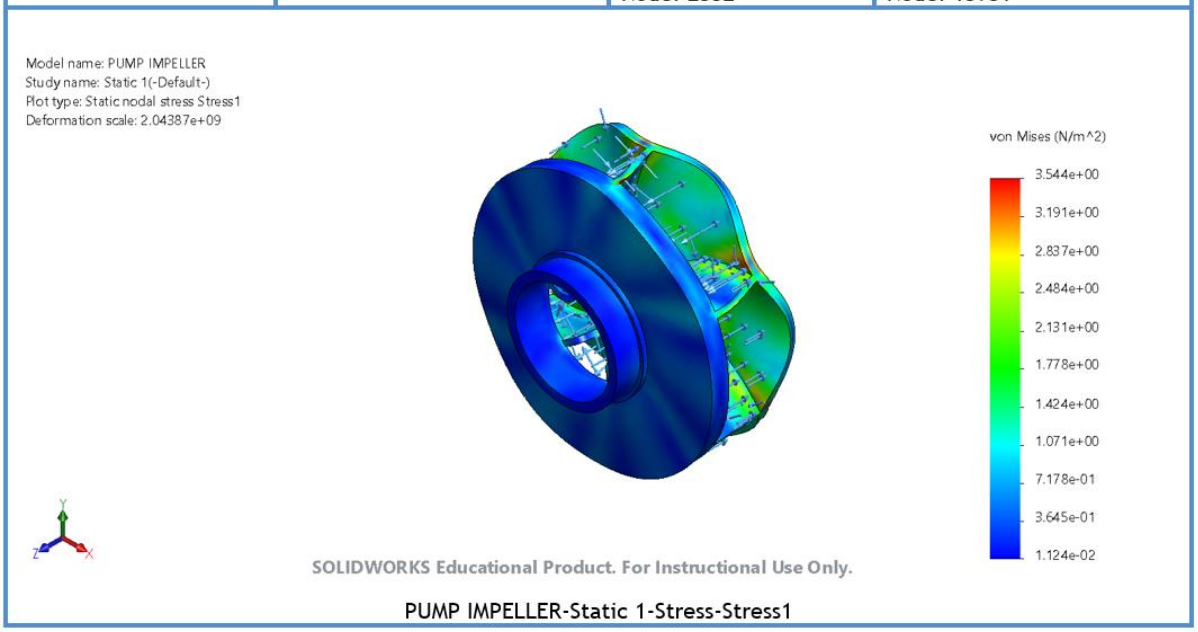

PUMP IMPELLER-Static 1-Stress-Stress1

Name	Type	Min	Max
Displacement1	URES: Resultant Displacement	0.000e+00mm Node: 368	7.617e-09mm Node: 10641

The about FEA analysis shows that the selected material – Grey cast iron will not hold up to operating pressures set out in many industries. The warping and displacement would cause to much disruption to the functionality of the operation and working conditions.

CFturbo

CFturbo offers commercial and engineering services for turbomachinery design, simulation, and optimization. I will be using the pump module. This is aimed at the design and optimization of all types of rotodynamic pumps. CFturbo supports the design of axial, mixed flow, and centrifugal pumps. CFturbo provides interface to other CAD and CFD systems, Solidworks being one. Simulation methods supports the development of the project.

The design of centrifugal pumps and impeller has been based on experiment with hardware models. Pump geometry that proved to be the best performance was selected and often used for different applications. In the past 20-25 years, design have leaned towards analytical methods that provide faster, more precise and option. This is software such as Solidworks and CFturbo.

CFturbo can be used to create geometry that defines the pump specifications set out in *Table 1*. It can be used to calculate main dimensions such as hub diameter, suction diameter, outlet width and impeller diameter. It can take user-defined approximation functions to determine impeller parameters and can give 1-D calculations for thermodynamic values. The requirements for centrifugal pumps have been focused on terms of power losses, performance characteristics, 3D flow phenomena, suction capability, cavitation, hydraulic components, noise, and vibrations. These requirements are often inevitable but thought the application of appropriate design and manufacturing the effects can be minimised. The software is multi-facetted and encompasses two and three-dimensional fluid mechanics, finite element stress, and vibration analyses. Software can also analysis cavitation theory and give the best and most efficient path for machining. This cuts down on cost and time, compared to hand-written calculations. By using the most up to date software, pump designers can satisfy the most stringent requirements.

The requirements for centrifugal pumps have been focused on terms of power losses, performance characteristics, 3D flow phenomena, suction capability, cavitation, hydraulic components, noise, and vibrations. These requirements are often inevitable but thought the application of appropriate design and manufacturing the effects can be minimised. The software is multi-facetted and encompasses two and three-dimensional fluid mechanics, finite element stress, and vibration analyses. Software can also analysis cavitation theory and give the best and most efficient path for machining. This cuts down on cost and time, compared to hand-written calculations. By using the most up to date software, pump designers can satisfy the most stringent requirements.

CFturbo can be used to create geometry that defines the pump specifications set out in Table 1. It can be used to calculate main dimensions such as hub diameter, suction diameter, outlet width and impeller diameter. It can take user-defined approximation functions to determine impeller parameters and can give 1-D calculations for thermodynamic values.

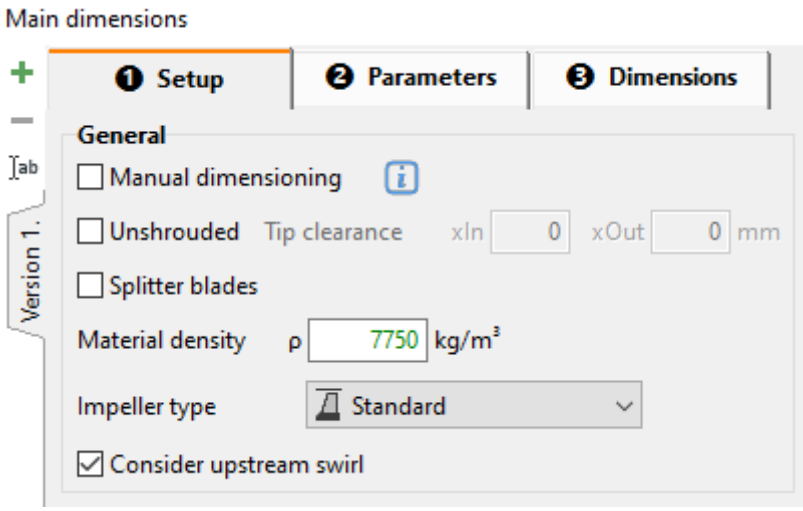

Figure 22 Main Dimensions

The set up looks at the materials density. The impeller is a grey cast iron EN-GJL-250/A48CL35B. the material density is $7750\,\frac{kg}{m^3}$.

Materials G

Notes 1

General criteria for a water analysis: pH-value >= 7; chloride content (Cl) <=250 mg/kg. Chlorine (Cl2) <=0.6 mg/kg.

Volute casing (102)	Grey cast iron EN-GJL-250/A48CL35B
Casing cover (161)	Grey cast iron EN-GJL-250/A48CL35B
Shaft (210)	Tempered steel C45+N
Impeller (230)	Grey cast iron EN-GJL-250/A48CL35B
Bearing bracket (330)	Grey cast iron EN-GJL-250/A48CL35B
Flat gasket (400)	DPAF seal plate asbestos free

Figure 23 Impeller (230) Material

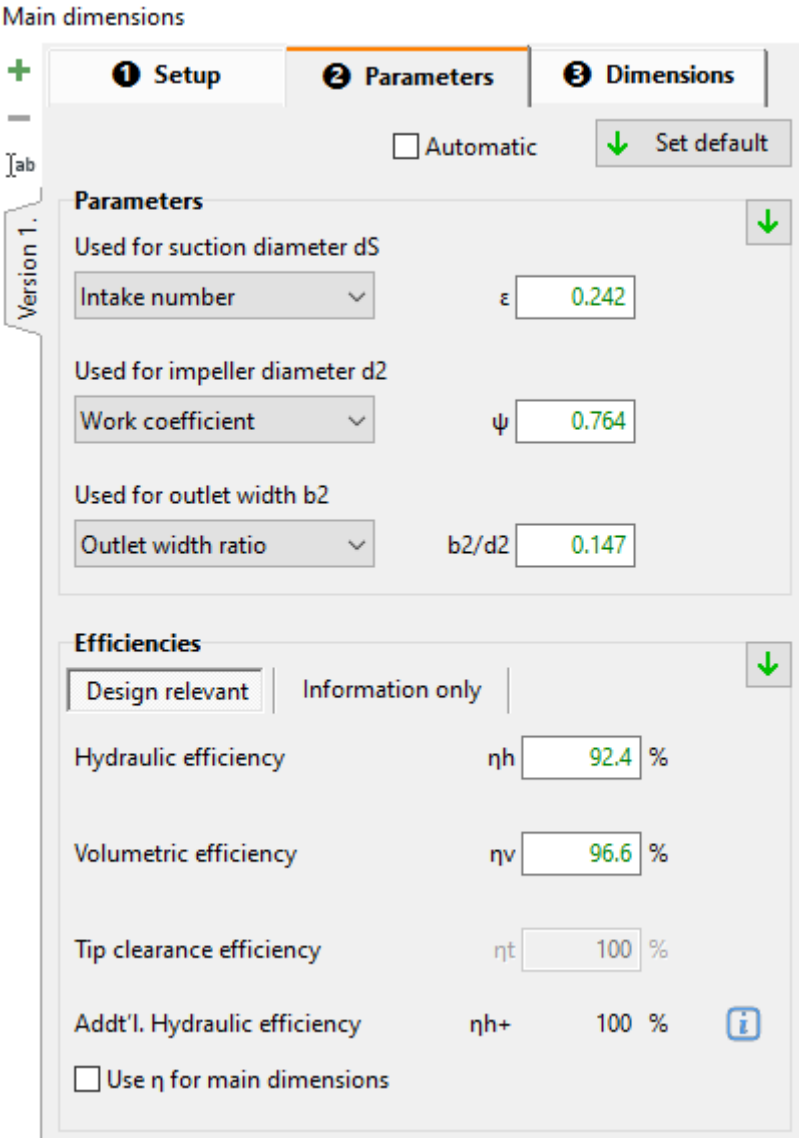

Figure 24 Main Dimensions-Parameters

The parameter defines the intake coefficient ε which is the ratio between the meridional inflow velocity and specific energy.

$$\varepsilon = \frac{C_0}{\sqrt{2Y}}$$

The work coefficient Ψ is a dimensionless expression for the specific energy. Specific energy refers to the energy per unit mass.

The hydraulic efficiency describes the energy losses within the pump caused by friction and vorticity. Friction losses can originate from shear stresses in the boundary layers. Vorticity losses are the result of turbulence. It can also occur by changes of flow cross sectional area and flow direction. The hydraulic efficiency is the ratio between specific energy Y and the energy transmitted by the impeller blades: 92.4% efficiency is very acceptable. The volumetric efficiency is a quality for the deviation of effective flow rate Q from the total flow rate inside the impeller. this also includes the circulating flow within the pump casing. Tip clearance efficiency contains losses due to the flow through the gap between the blade tips and the housing from the pressure to the suction side of the blades.

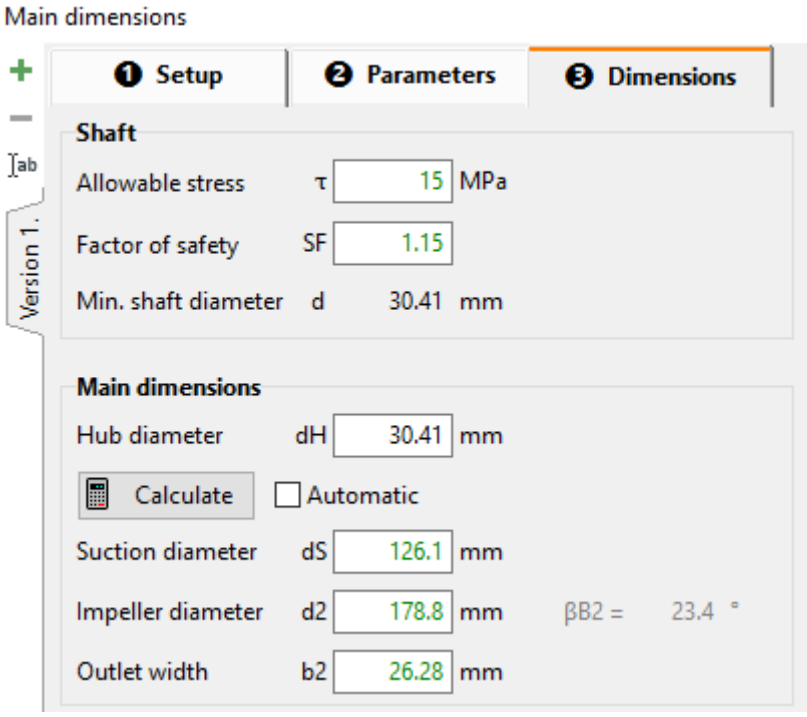

Figure 25 Main Dimensions-Dimensions

Allowable stress in the shaft is the allowable strength due to twisting that can be applied on the mechanical material. The factor of safety defines how much stronger the system is than it needs to be for the load to be applied.

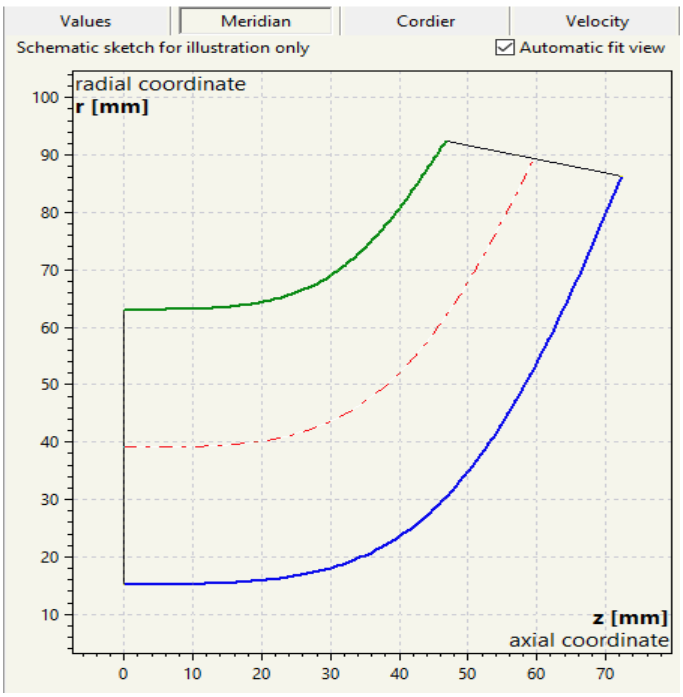

Figure 26 Meridian blade profile

The Meridian contours allow for changing the impeller shape among geometric variables. It effects the curvature of the shroud and hub contours, height of the blade, and the passage.

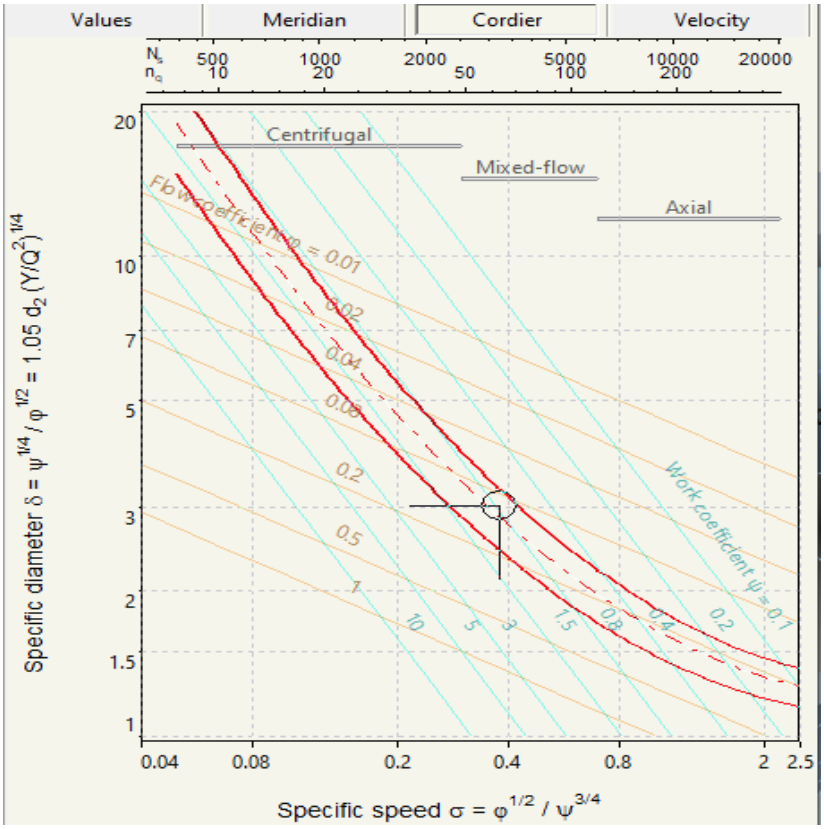

Figure 27 Cordier

The Cordier diagram can be used to check the impeller diameter. For a given operating point like the flowrate or pressure, the Cordier diagram can provide the optimum diameter of the impeller. it is based on measurements and draws on the relationship between flowrates, pressures, and rotating speeds to determine a diameter. This impeller has a flow coefficient of 0.03 and work coefficient of 0.8.

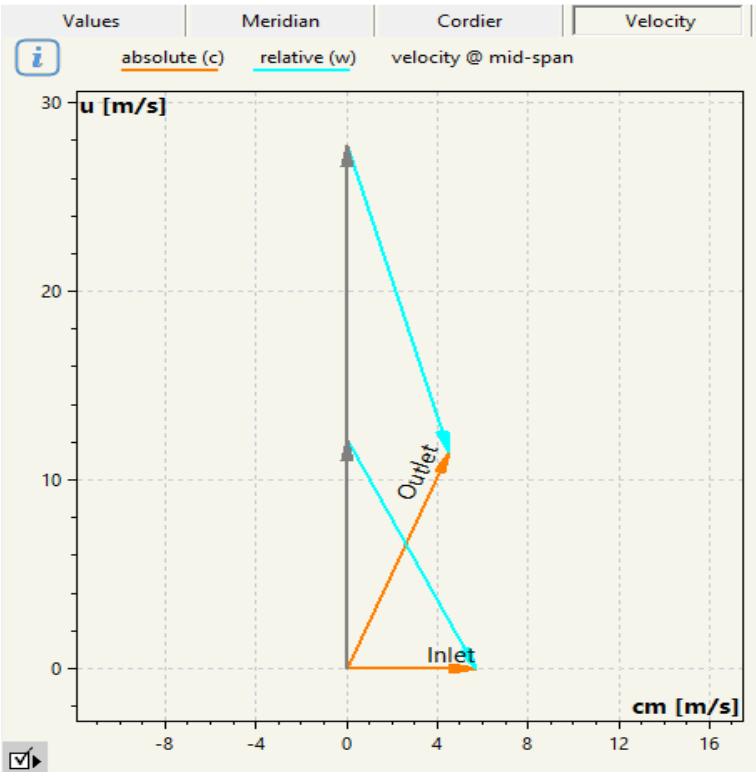

Figure 28 Velocity Triangles

Blade properties such as blade outlet angle has more influence on the efficiency of centrifugal pump but has little influence on the head (Hongchang Ding, 2019). CFturbo can define the blade shape and design blades on meridional surfaces. Velocity triangles and flow components and flow angles can be generated.

The velocity triangles of inflow and outflow are shown in Fig 18. This is based off the design point set out in the main dimensions. The values are as following

Calculated	Inlet m/s	Outlet m/s
absolute (c)	40	21.8
Relative (w)	52.67	22.41
Tangential	14.28	27.01
CFturbo		
absolute (c)	5.7	12.3
Relative (w)	13.4	16.9
Tangential	12.1	27.8

Table 3 velocity triangle values

% error	Inlet	Outlet
Absolute	601%	77%
Relative	293%	33%
Tangential	18%	0.2%

Table 4 % errors

Inlet			
Peripheral speed	u1	12.1	m/s
Meridional velocity	cm1	5.7	m/s
Meridional velocity (internal)	cm1*	5.9	m/s
Abs. circumferential velocity	cu1	0	m/s
Absolute velocity	c1	5.7	m/s
Rel. circumferential velocity	wu1	-12.1	m/s
Relative velocity	w1	13.4	m/s
Absolute flow angle	α1	90	°
Relative flow angle	β1	25	°
Static pressure	p1	15.84	bar
Total pressure	pt1	16	bar

Figure 29 inlet value generated by CFturbo

Outlet			
Peripheral speed	u2	27.8	m/s
Meridional velocity	cm2	4.5	m/s
Meridional velocity (internal)	cm2*	4.7	m/s
Abs. circumferential velocity	cu2	11.5	m/s
Absolute velocity	c2	12.3	m/s
Rel. circumferential velocity	wu2	-16.3	m/s
Relative velocity	w2	16.9	m/s
Absolute flow angle	α2	21.5	°
Relative flow angle	β2	15.5	°
Static pressure	p2	18.18	bar
Total pressure	pt2	18.94	bar
Hub diameter	dH2	172.6	mm
Tip diameter	dS2	185	mm

Figure 30 outlet values generated by CFturbo

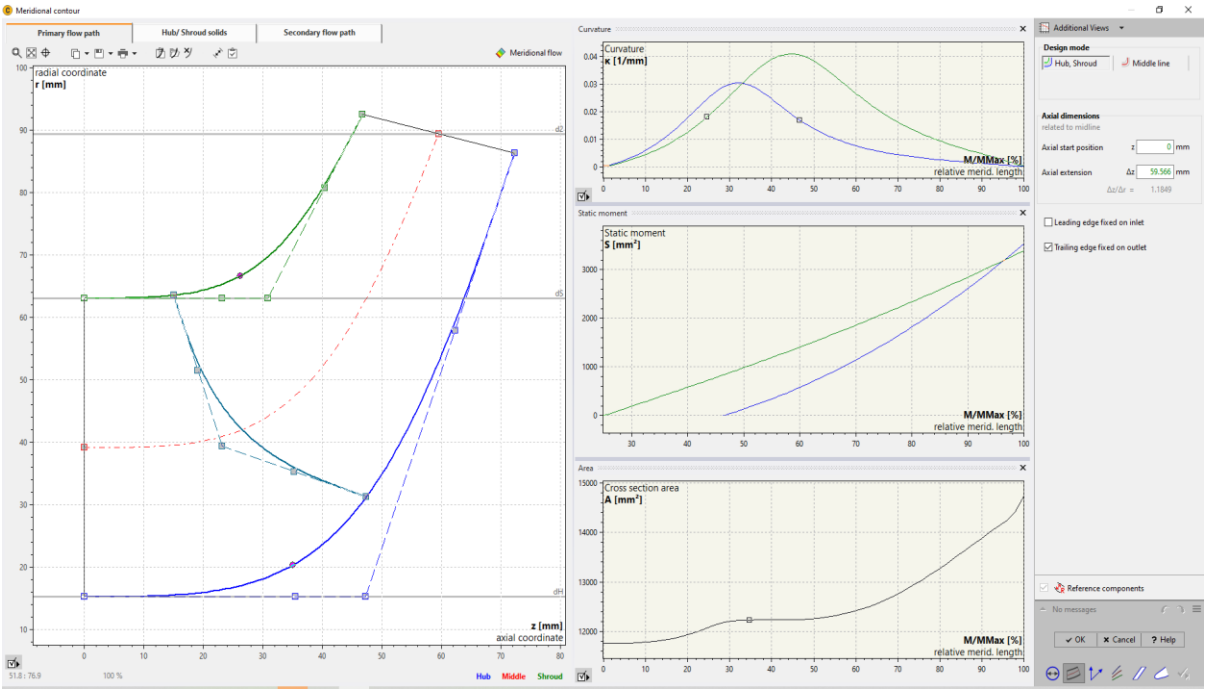

Figure 31 Meridional Contour-Primary flow path

The meridional contour is the cross section of the impeller blades. Different shapes can have effects on the curvature, static moment, and cross-sectional area. This is optimized to give the impeller sufficient minimum and maximum values to operate. The is the primary path that the fluid takes as it enters and exits the impeller. The primary flow path runs parallel to the direction of fluid where the secondary flow is perpendicular to this. It can occur when the fluid flows around a bend. A meridional contour can be designed using Bezier polynomials, lines, and arcs. The leading and tail edge of the vanes can be positioned straight or curved. CFturbo can calculate the meridional flow based on the input.

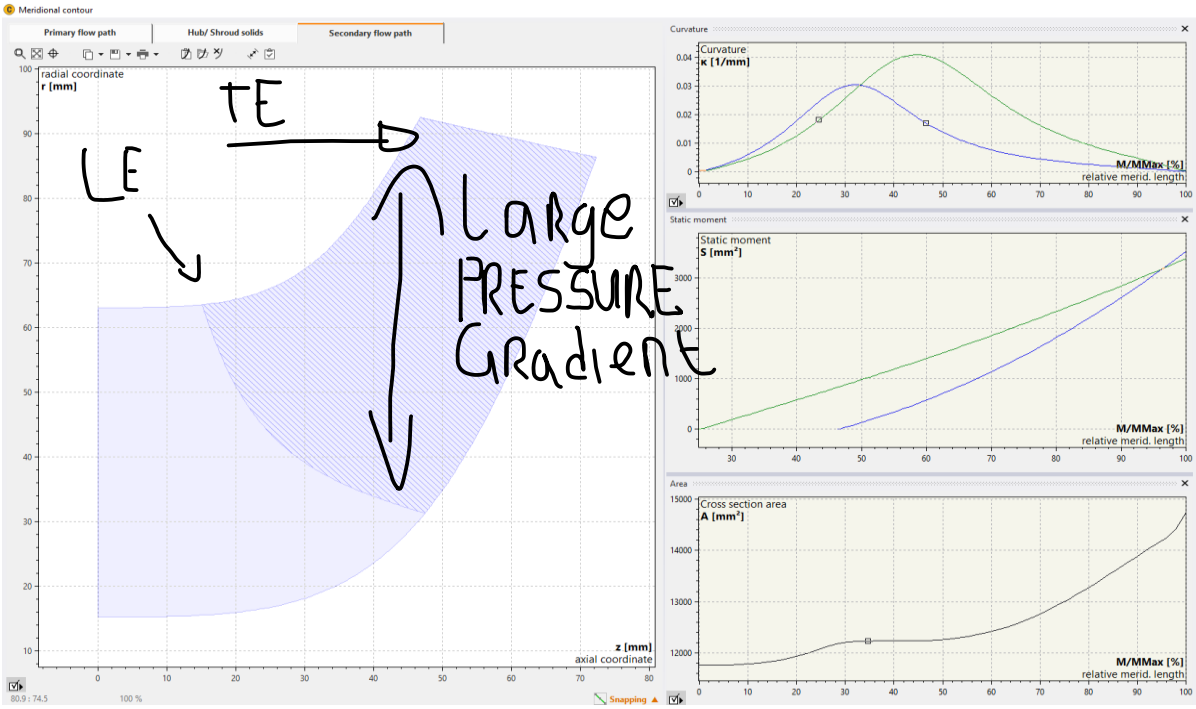

Figure 32 Meridional Contour-Secondary flow path

Secondary flows in pumps drive the fluids in the viscous layers to the shroud surface corner area. The secondary flow has effects on the efficiency and impeller stability. The secondary flow has an influence on the generation of the exit flow non uniformity or jet wake and affects the performance and stability of the downstream diffuser. The meridional secondary flows on the blade suction surface are important since the boundary layers are thicker on the suction surfaces than on the pressure surfaces at the same design point. Figure 22 shows the flow pattern near the suction surface of the pump. The blade angle connects the inlet and exit blade angles by a smooth monotonous curve. The spam wide secondary flow is generated by a large pressure gradient of reduced static pressure between hub and should. The pressure fields can be controlled by the blade loading parameter. Blade lean is used to control the pressure gradient in the span wide direction. This span wide component of the blade forces created by the blade lean increases the pressure on the shroud side while reducing the pressure on the hub side. (Patel, 2021)

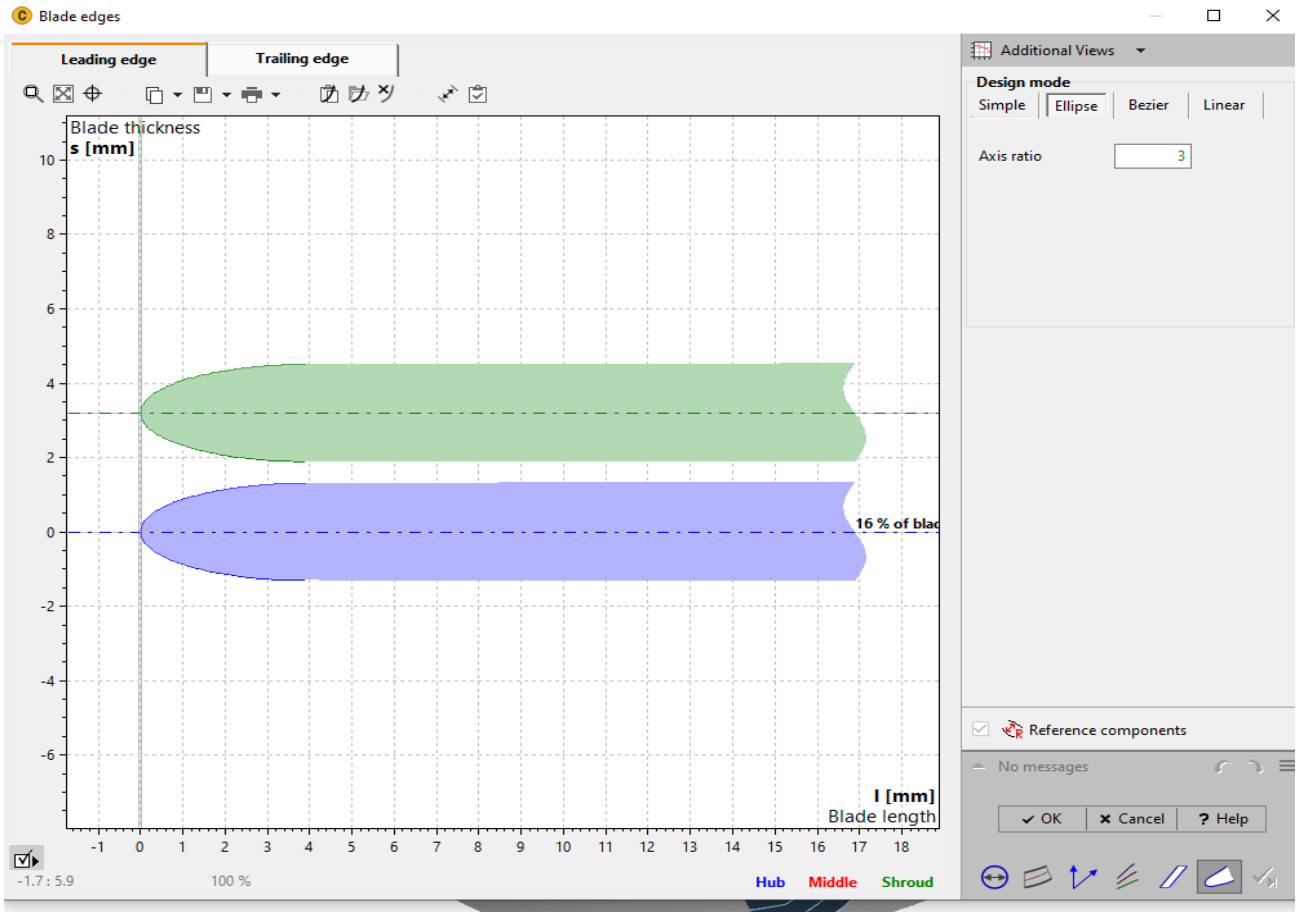

Figure 33 Blade Edges-Leading edge

The leading-edge profiling can generate excess velocities and cause intense low-pressure peaks that can cause cavitation behaviour and affect efficiency. The slight elliptically shaped leading blade edge is only suitable for small pumps. The elliptical inlet provides favourable pressure distributions. The blades profiling extents over 4mm which react less sensitively to incidence. This also reduces the risk of the blade edge cracking. The blade thickness determines the mechanical strength and castability. It is determined by the head per stage or tip speed, impeller outlet width, number of blade and the material. All these factors must be within the allowable alternating stress. Increasing the blade width will rise the stress experienced by the blade at a given head. The minimum thickness required to achieve good casting qualities must be observed in the case of cast impellers; it depends on the casting process and is 3-5mm (Gülich, 2020). The thickness for the generated blades is 2.5mm.

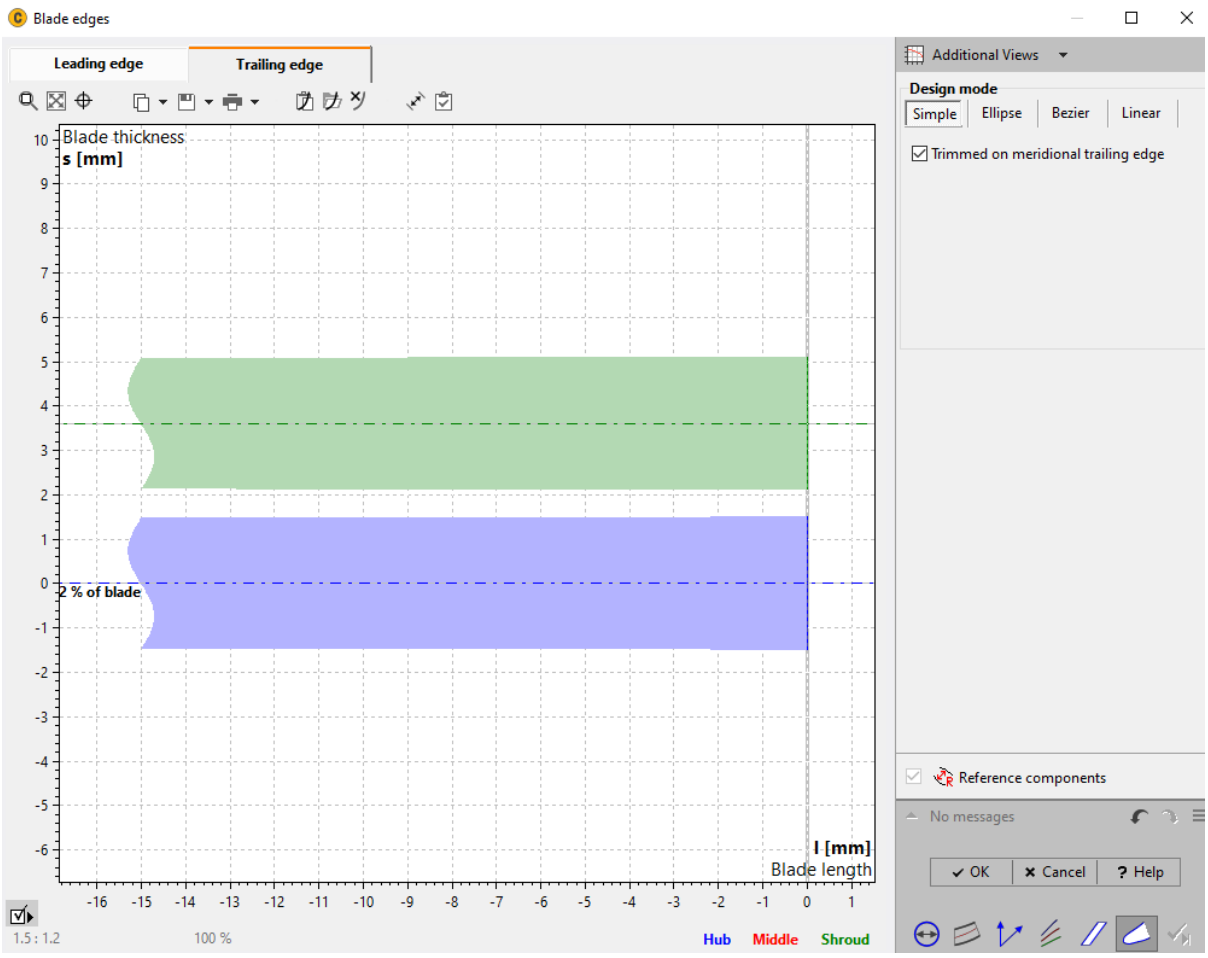

Figure 34 blade edges - trailing edge

The blades should be tapered towards the trailing edge to roughly half of the blade thickness to reduce the width of the wake, turbulent dissipation, and pressure pulsations (Gülich, 2020) The trailing edge is often extended into the impeller suction area due to strength reasons. The trailing edge affects the hydraulic performance in terms of lift. Vibration can arise from unsteady impellers and this can influence sound emissions.

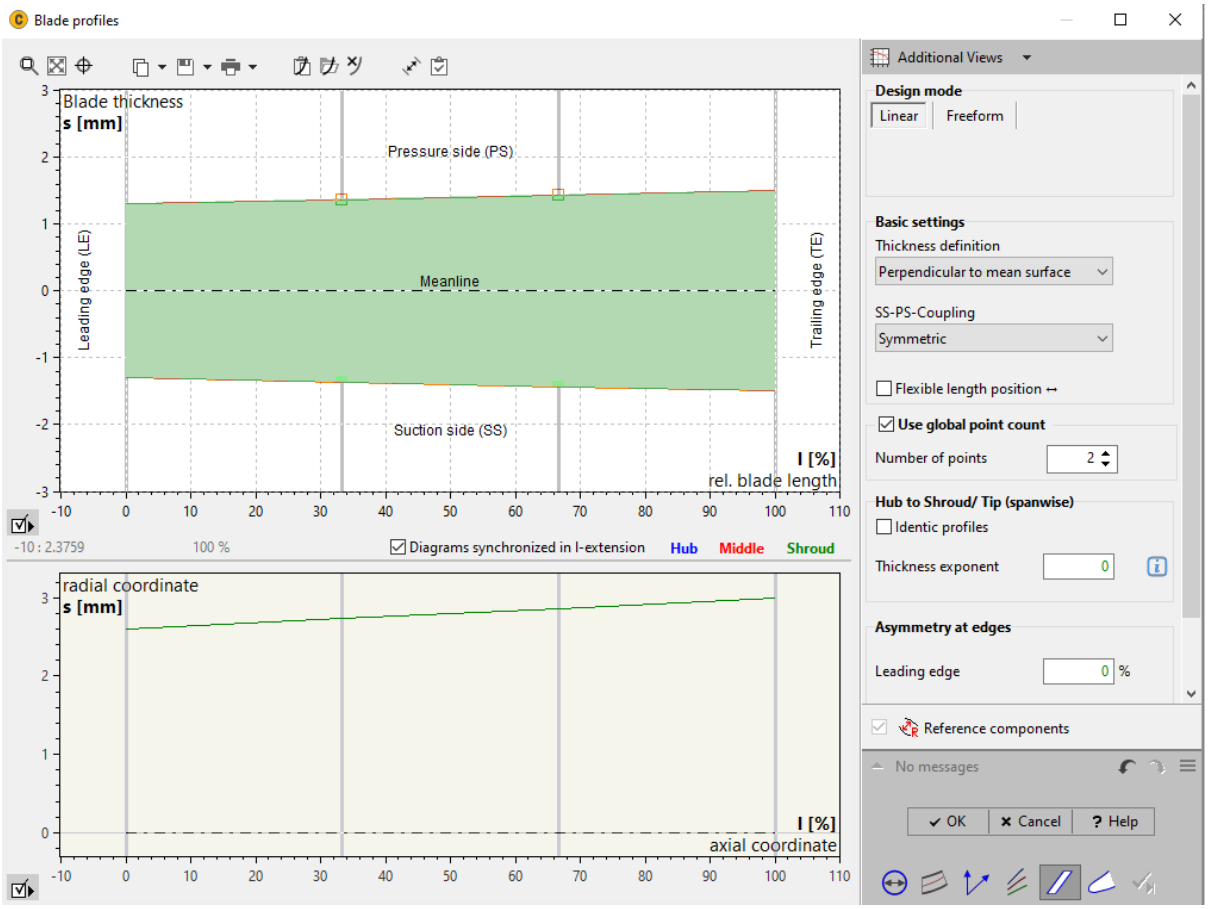

Figure 35 blade profiles

Blade profile design is an important step in the design process of an impeller. The geometric and structural properties are represented in the blade profile. They are optimized for a design condition and off design efficiencies are evaluated by changing the inlet flow angles. This ensures there is no sudden drop off in the efficiency and that conditions remain robust and stable. The displacement of fluid by the impeller blade profile can give rise to noise emissions. This water pump has a slimmer leading-edge thickness than the trailing edge relative to the blade length.

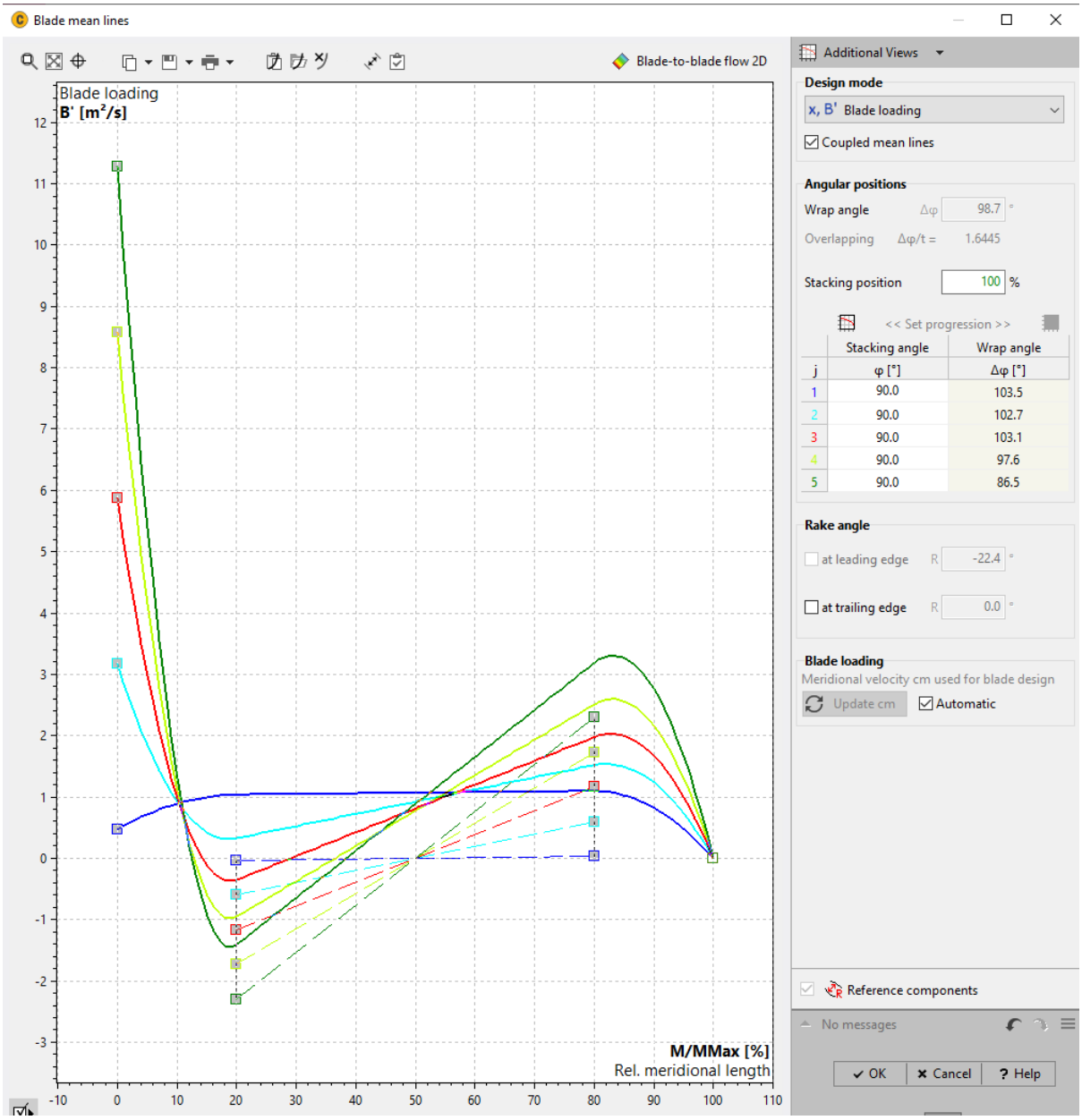

Figure 36 Blade mean lines

Blade loading is an important parameter in the design process. The blade loading defines the amount of work done by the impeller blade and the distribution along the blade. This is distributed across the relative meridional length. The hydrodynamic blade loading should be in an optimum range: if the loading is to low, unnecessary high friction losses will be expected. If the loading is too high, the turbulent dissipation losses increase due to uneven flow distribution (Gülich, 2020)

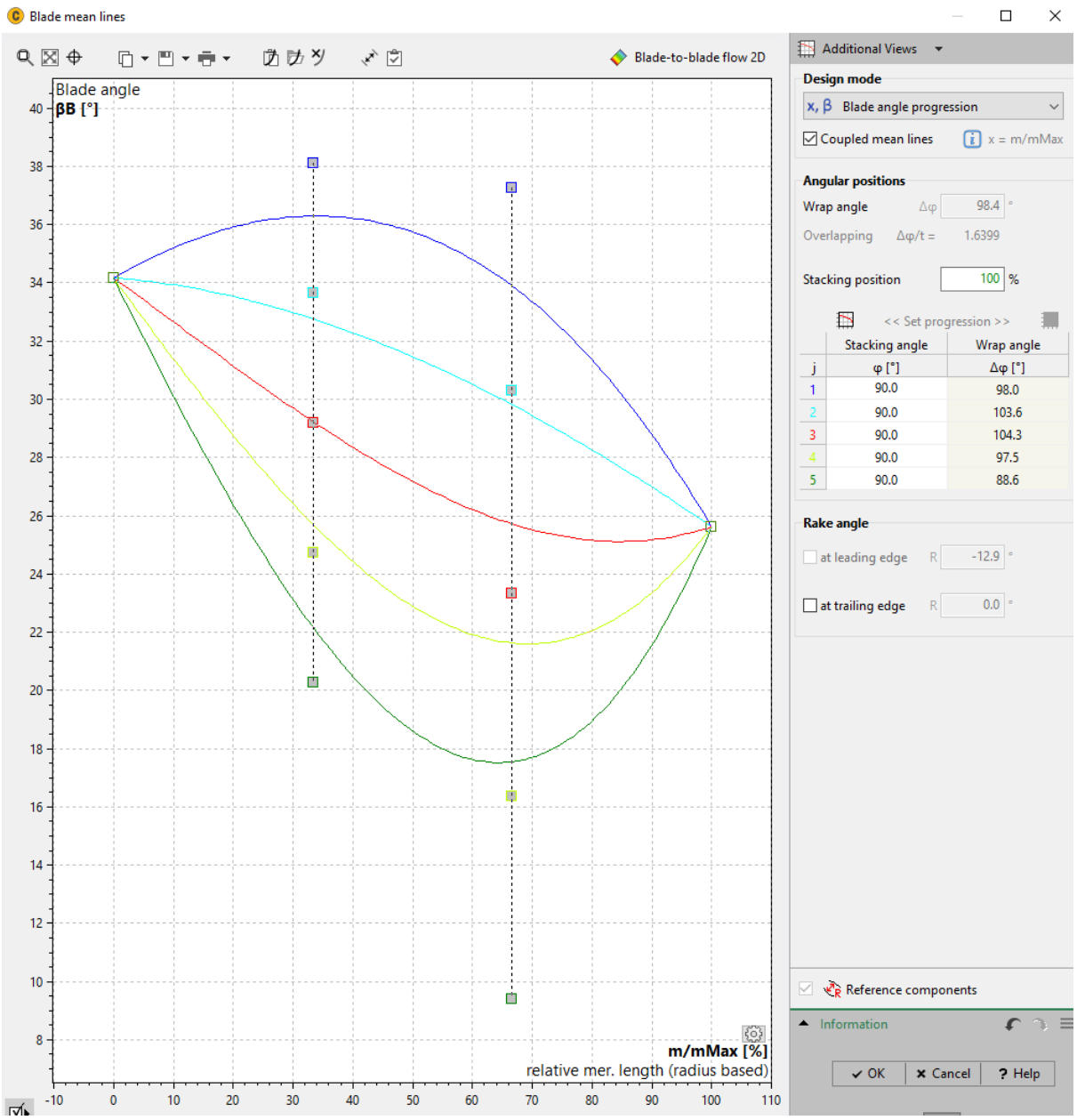

Figure 37 Blade angle

The blade wrap angle is defined as the one between the tangent lines at the trailing and leading edges of the blade. A large wrap angle leads to a longer flow passage between the blades and a rise in in friction losses. In contrast a small wrap angle results in poor control on the flow around the impeller.

Using the commercial tool CFturbo will help design and test the impeller and will analysis data. It is important that the theory matches the actual data.

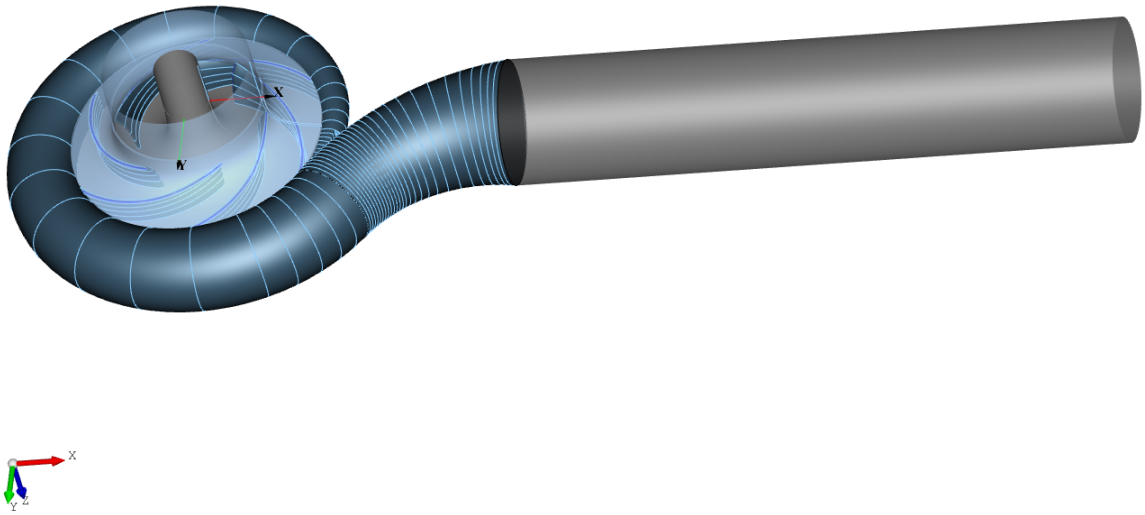

Figure 38 Impeller with volute and discharge modelled on CFturbo

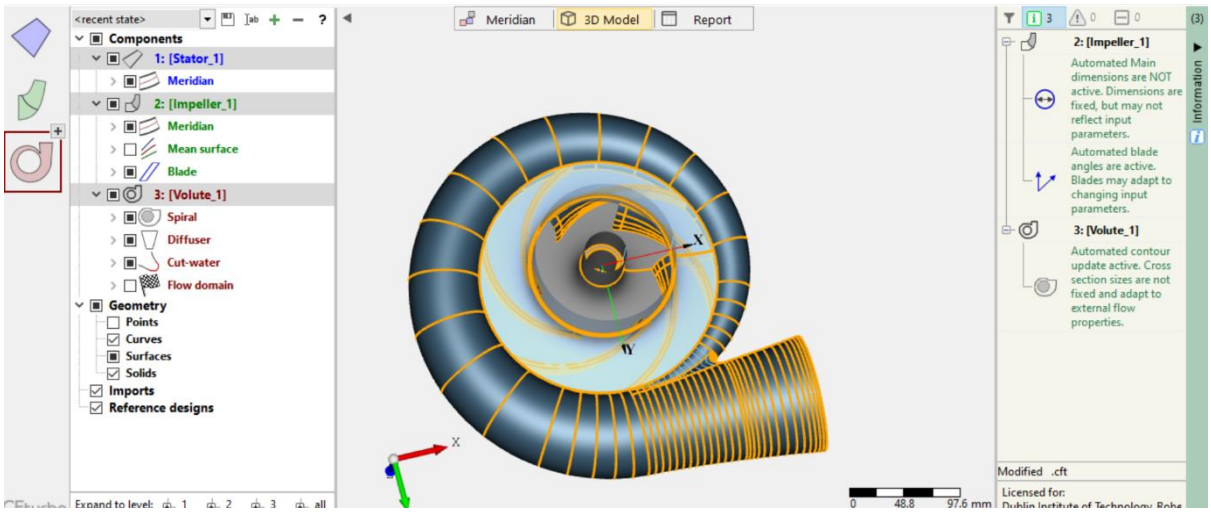

Figure 39 3D model displaying Stator, Impeller, and Volute

By visually seeing the impeller and components associated with a centrifugal pump as a 3D model, it gives a greater understanding of the mechanics of the machine.

The impeller analysis will be calculated with equations gathered but it is with the aid of tools such as CFturbo and Solidworks that it will be possible to demonstrate the full analysis of the impeller.

Computational fluid dynamics or CFD and CAD help understand and interpretate numerical flow calculations of centrifugal pumps. These methods best describe the boundary layers and flow parameters in pumps. It can then be put onto curve lines and charts as seen in fig.14; Blade mean lines.

The complex flow phenomena in centrifugal pumps and around the impeller is based on empirical data for determining the flow performance and losses. Software such as CAD and CFturbo has fostered the development of numerical methods that can solve the equations in complex components.

The developments that allow the design methods, interactive processes and display graphics have all been due to CAD software. The data that is calculated during hydraulic design states such as the geometry of the blade surface, fig 6, which includes linear thickness distribution profiles, can be modified when subjected to stress tests and flow tests. This will ensure an acceptable geometry is generated. An engineer can direct the flow of calculations and geometry changes to other modules. Solidworks and CFturbo are set up as friendly interfaces, that allow the designer to easier transcend from one component to another while auto generating any changes left behind. The resultant designs will be efficient and capable of being exported to another prototype hardware rapidly.

The design of a centrifugal pump and impeller is generally undertaken to obtain the most efficient and optimal performance through efficiency and cavitation. This is achieved by modifying the blade geometry. The impeller and pump must still reach the requirements for mechanical integrity and manufacturing ease. The two major geometric factors affecting pump inducer and impeller performance are the shape of the pressure and suction surfaces of the blading, and the contours of the hub and shroud (Jasen, 1983). That performance is determined by boundary layer behaviour, and the extent of any separated flow regions, the intensity of the secondary flow and minimum pressure occurring in the impeller to avoid cavitation. The impeller designer uses velocity distribution along the blade lines to control boundary layer separation of flow losses. While pressure distribution along the surfaces is inspected to avoid cavitation. It is through manipulation of the blade geometry that the designer effects the velocity and pressure distribution and therefore the performance of the design.

The design and performance analysis methods can be classified into three groups: (Asuaje, 2005)

(1) The modification of models and performance using experimental correlations. This is vastly used by manufacturers. The design and performance analysis requires a lot of information from experimental tests as well as empirical correlations. Trails of a new pump require lots of investment and time, which can influence manufacturing.
(2) The quasi-three-dimensional method is a more robust optimization process. This was developed by Wu (Wu, 1952)when high speed computers were not yet available. It is based on the average flow concept. The 2-D Euler-equations are solved in cylindrical coordinates in that the flow between the front and rear shrouds and between the blades of an impeller is iteratively superimposed (Gulich, 2020).
(3) CFD, fast geometry grid generation and numerical methods for the solution of the Navier-Strokes equation.

Quasi-3D- procedures are unable to predict losses and secondary flows. It is used for impeller calculations at best efficiency point and if limits are satisfied, such that the first draft of an impeller can be optimised by interactive modification of the blades, while the resulting pressure and velocity are instancy available.

Navier-Strokes equations express conservation of momentum and conservation of mass for Newtonian fluids. This differs from Euler's Equation as it takes viscosity into account, where Euler's Equations model inviscid flow.

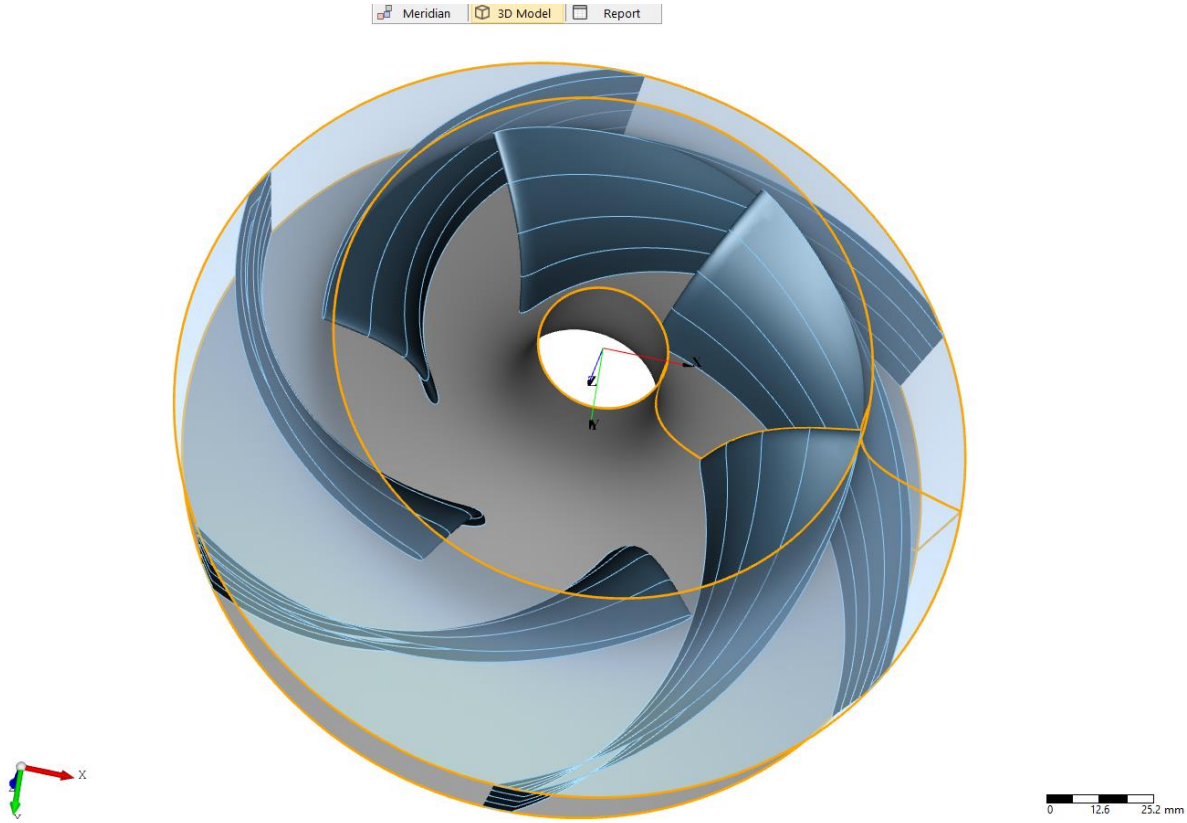

Figure 40 3D model of KSB impeller

Problems encountered

Using CFturbo was a great tool for learning the foundations of pump design and steps involved in the impeller process. I encountered some issues when trying to run a simulation on models created in CFturbo. Firstly, watertight solid models in CFturbo are created using ''Model Finishing''. Two types of solids are created

- **Flow domain**: contain the fluid volume
- **Material domain**: contains the real geometry

These solids are applicable for impellers and stators. To export to SOLIDWORKS – using the STEP export format, the visible elements in the 3-D view would be exported. Upon importing the file and opening it in SOLIDWORKS, the assembly of the impeller was containing surfaces and not solid materials. For volutes, no material solid modelling is currently available in CFturbo.

Before attempting to set up the flow simulation in SOLIDWORKS the model required a lot of rework. I needed to have the bodies in SOLIDWORSK as SOLID Geometry, not surface models to get the best result. I used a macro model and edited it using the surface editing tools to create a usable impeller and housing. Along the way I encountered lots of duplicate overlapping surfaces plus hundreds of gap errors in the model. This is generated from tools CFturbo use to create the geometry. The tool CFturbo uses does not have as high of a tolerance for stitching surfaces together so what was a gap in SOLIDWORKS (as the Parasolid kernel tolerance SOLIDWORKS uses is 1x10-8) was a connected edge in the parts I imported into SOLIDWORKS. I reduced the model down to just two solid bodies. A section of the internal portion of the model had to be closed off to create a solid.

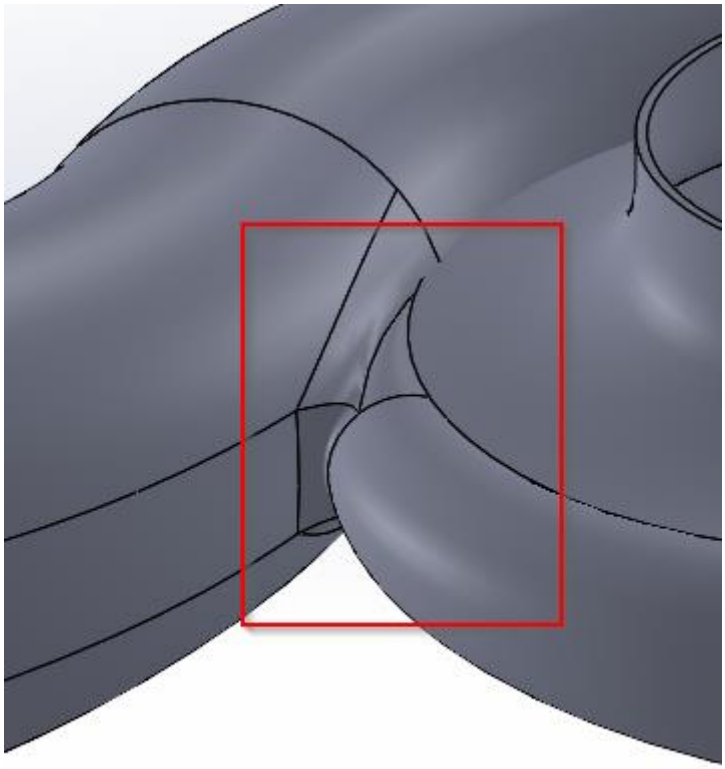

Figure 41 Portion that required closing off to make a solid geometry

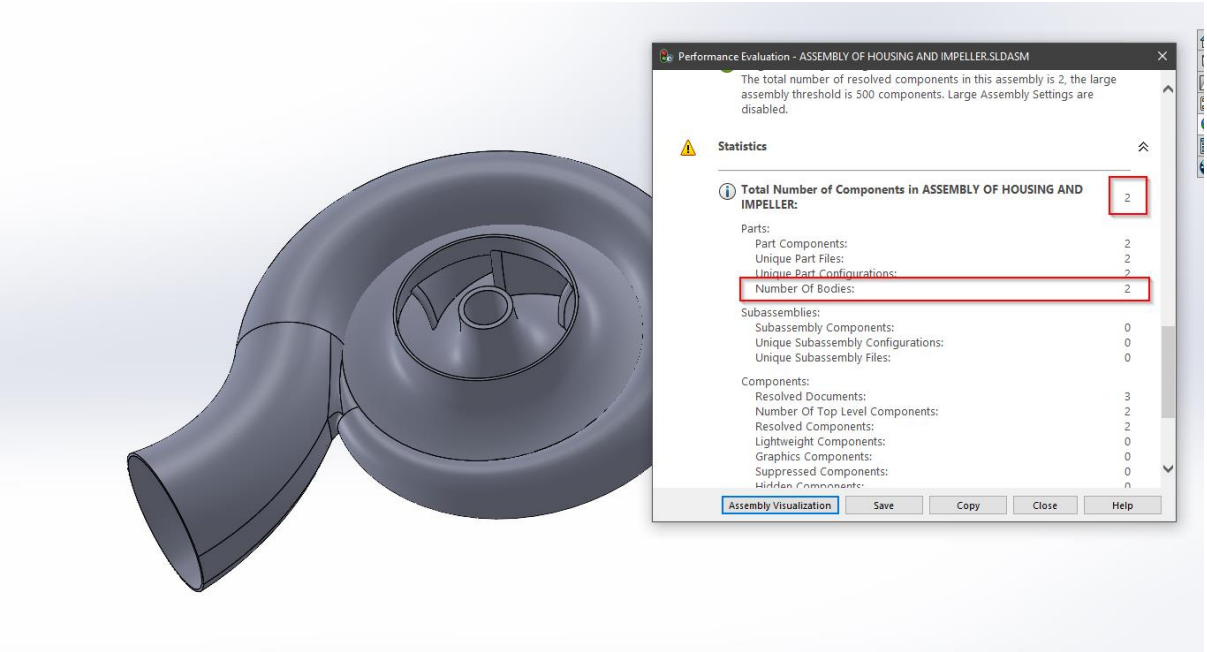

Figure 42 SOLIDWORKS housing and impeller

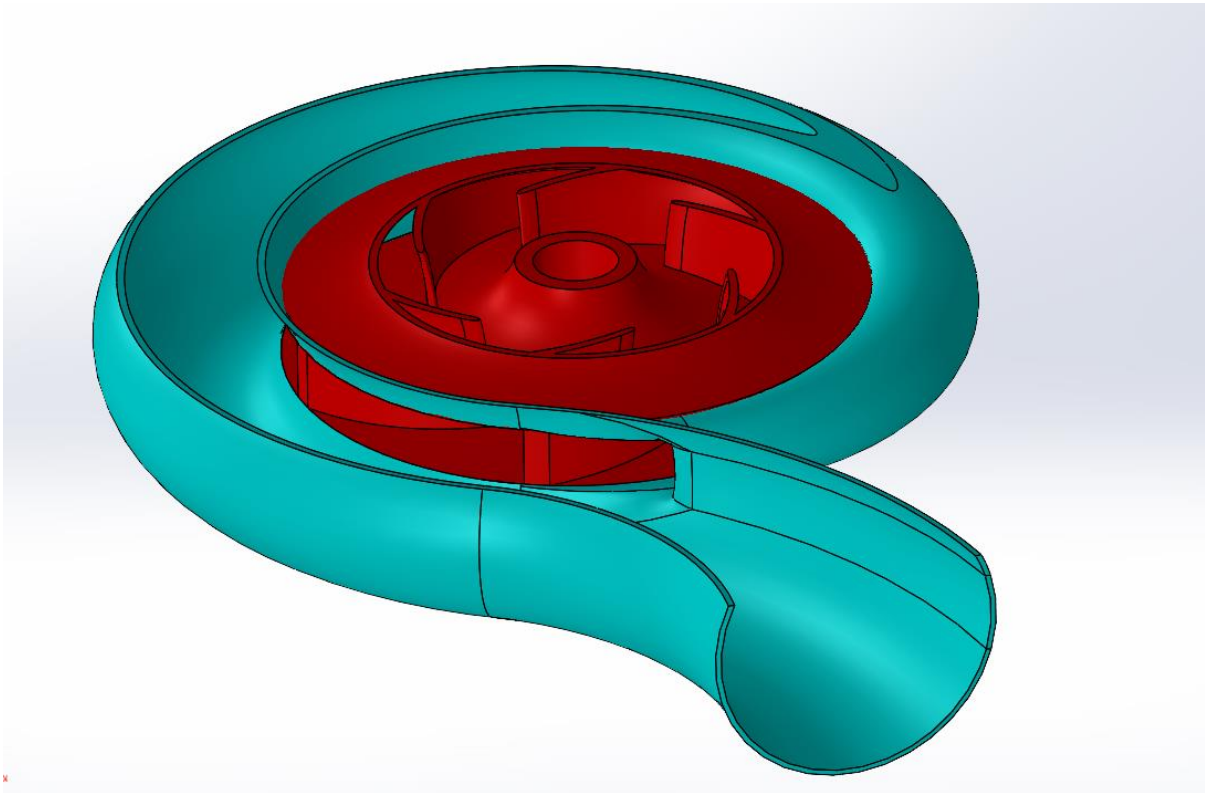

Figure 43 Cut view of the housing and impeller generated by CFturbo in SOLIDWORKS

SOLIDWORKS Design and drawings

SOLIDWORKS simulation allowed for the design, performance evaluation and assembly of the KSB pump. It can generate the fluid forces and complex paths the fluid follows. Because of the complex flow phenomena in centrifugal pumps, the design of impellers and other hydraulic components is based on empirical data for determining the flow deflection in the impeller and estimating the performance and losses.

SOLIDWORKS was used to design and assemble the selected KSB pump.

Engineering Drawings

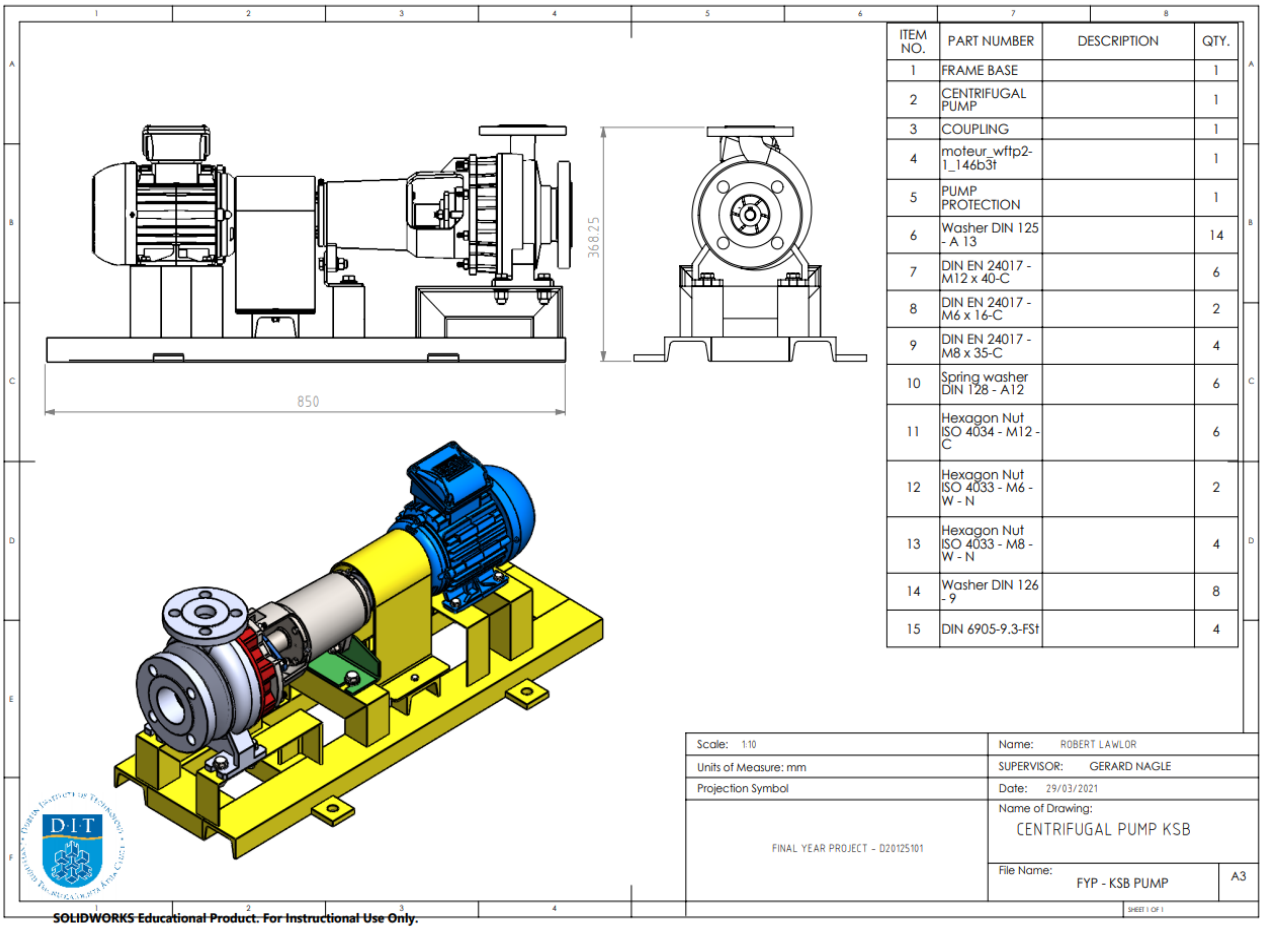

Figure 44 KSB Centrifugal pump

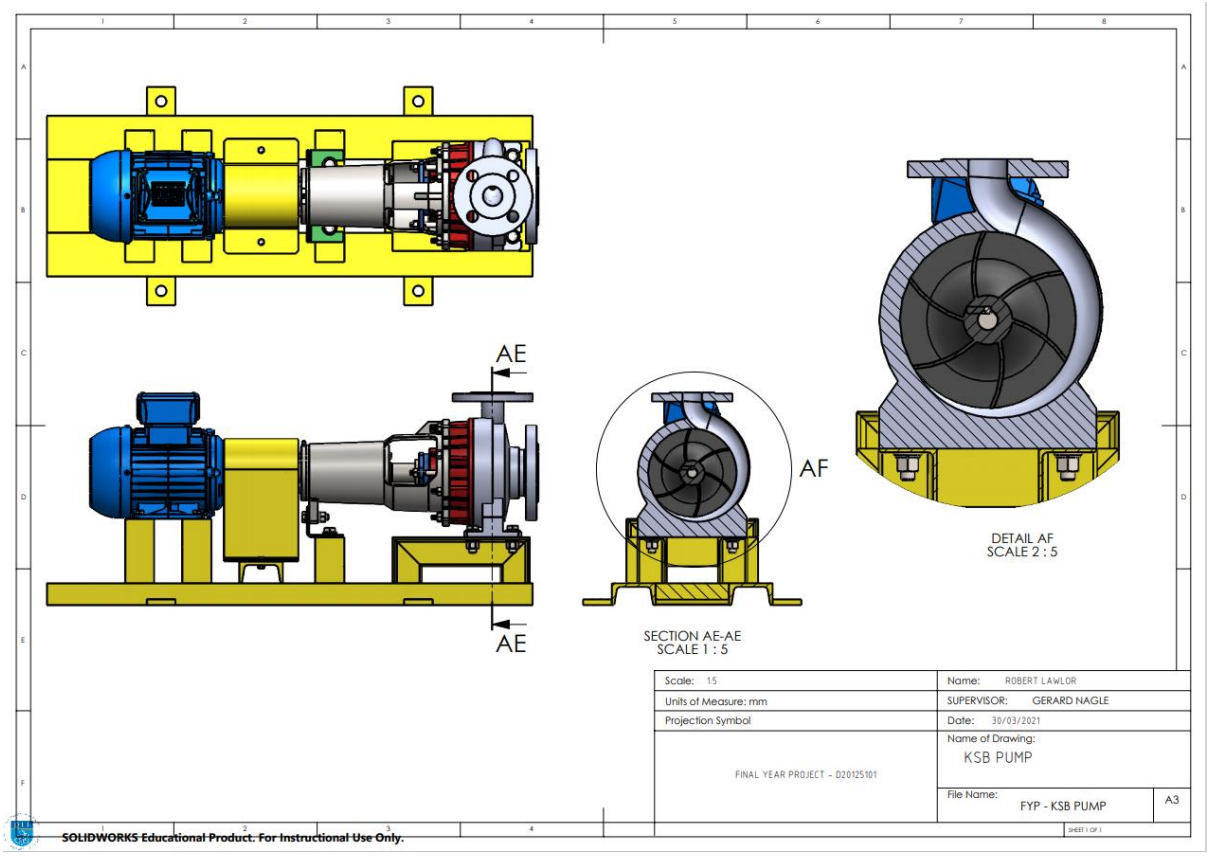

Figure 45 KSB Pump

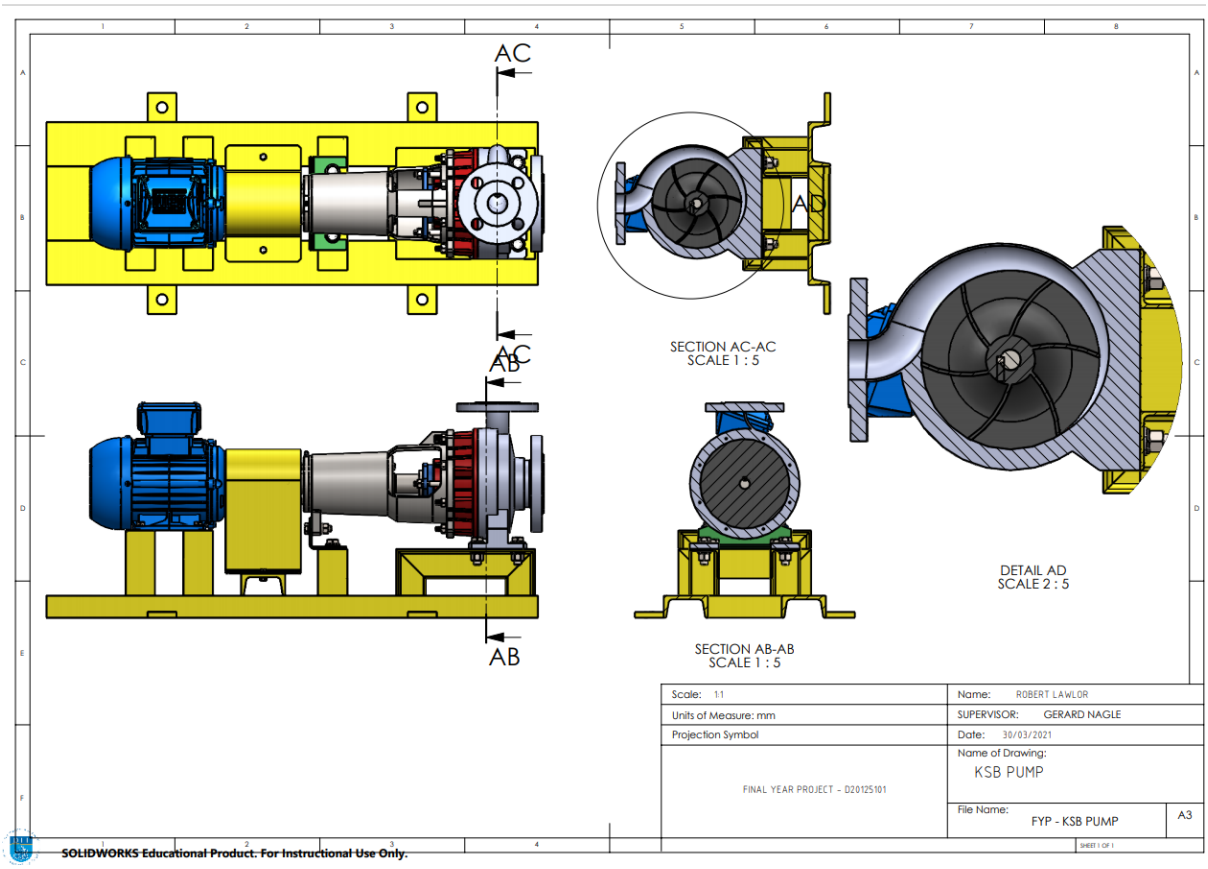

Figure 46 KSB cut view impeller

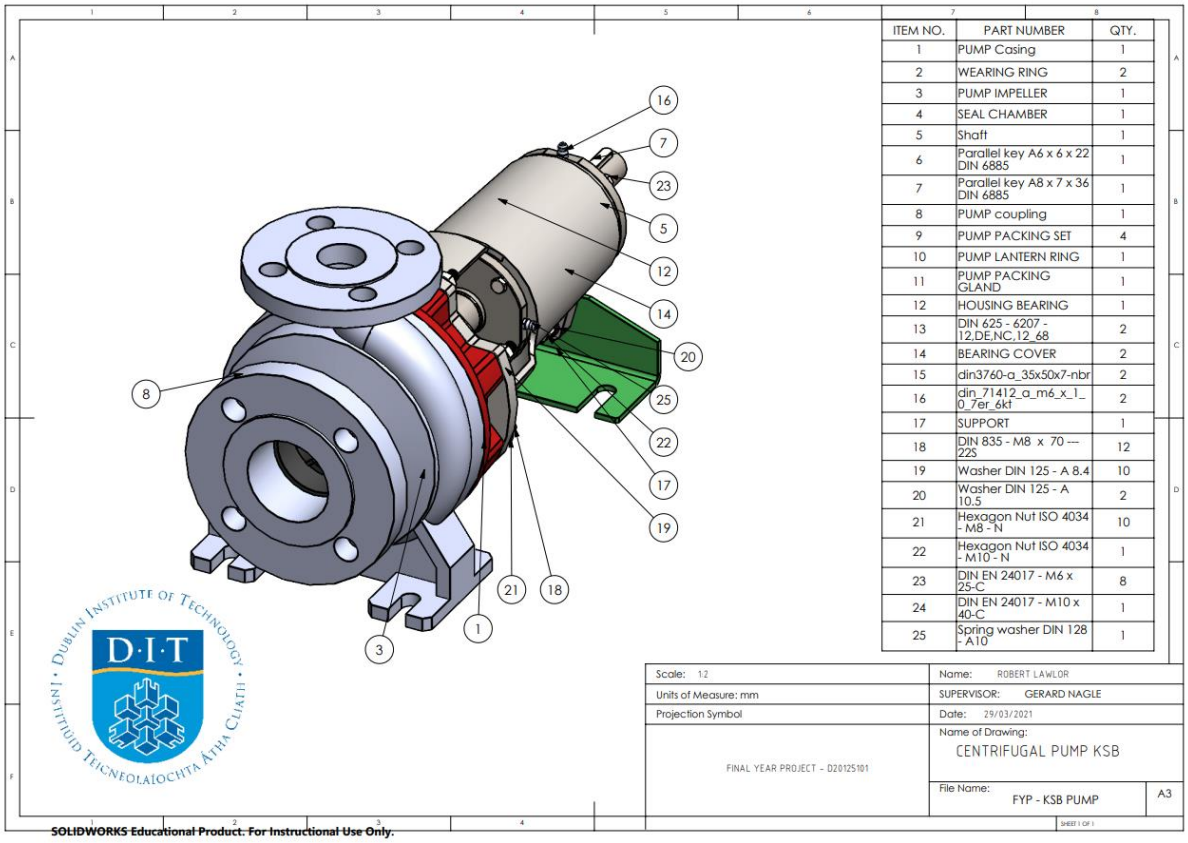

ITEM NO.	PART NUMBER	QTY.
1	PUMP Casing	1
2	WEARING RING	2
3	PUMP IMPELLER	1
4	SEAL CHAMBER	1
5	Shaft	1
6	Parallel key A6 x 6 x 22 DIN 6885	1
7	Parallel key A8 x 7 x 36 DIN 6885	1
8	PUMP coupling	1
9	PUMP PACKING SET	4
10	PUMP LANTERN RING	1
11	PUMP PACKING GLAND	1
12	HOUSING BEARING	1
13	DIN 625 - 6207 - 12,DE,NC,12_68	2
14	BEARING COVER	2
15	din3760-a_35x50x7-nbr	2
16	din_71412_a_m6_x_1_0_7er_6kt	2
17	SUPPORT	1
18	DIN 835 - M8 x 70 --- 22S	12
19	Washer DIN 125 - A 8.4	10
20	Washer DIN 125 - A 10.5	2
21	Hexagon Nut ISO 4034 - M8 - N	10
22	Hexagon Nut ISO 4034 - M10 - N	1
23	DIN EN 24017 - M6 x 25-C	8
24	DIN EN 24017 - M10 x 40-C	1
25	Spring washer DIN 128 - A10	1

Figure 47 Casing and housing

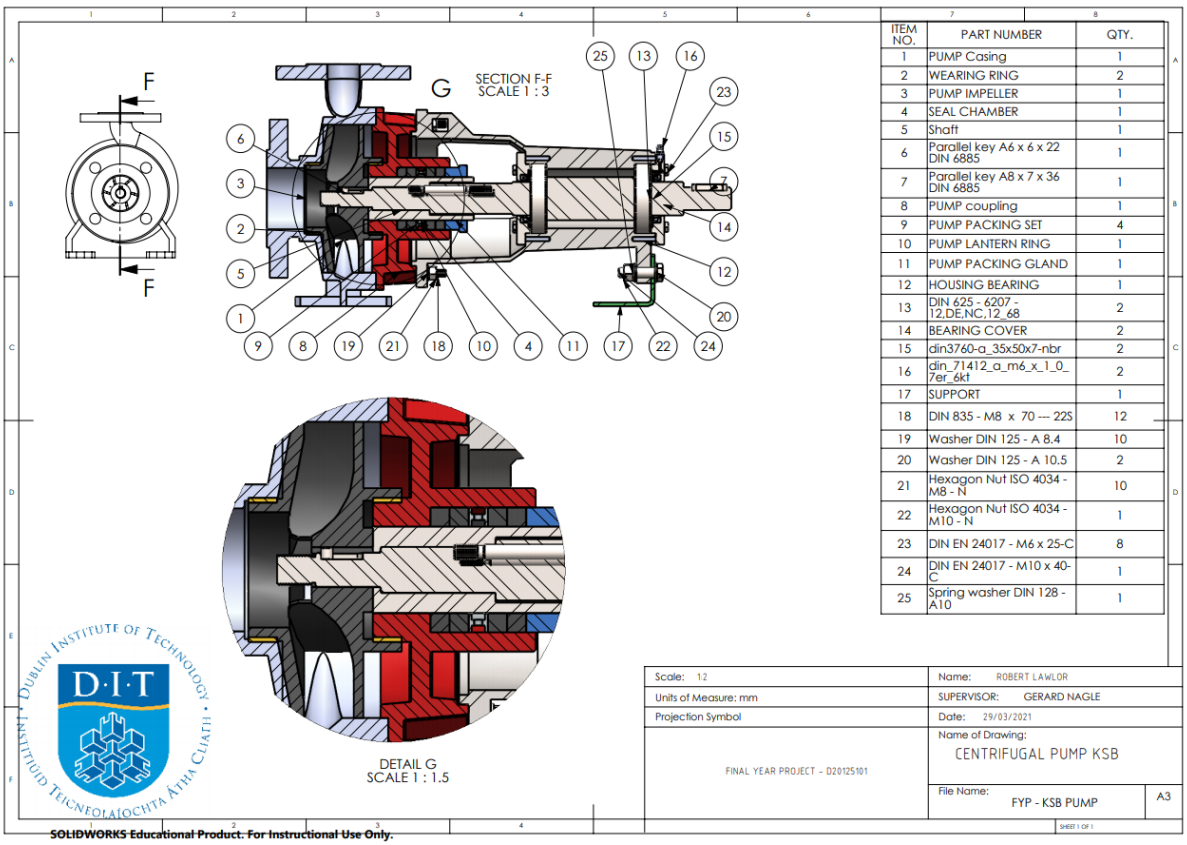

ITEM NO.	PART NUMBER	QTY.
1	PUMP Casing	1
2	WEARING RING	2
3	PUMP IMPELLER	1
4	SEAL CHAMBER	1
5	Shaft	1
6	Parallel key A6 x 6 x 22 DIN 6885	1
7	Parallel key A8 x 7 x 36 DIN 6885	1
8	PUMP coupling	1
9	PUMP PACKING SET	4
10	PUMP LANTERN RING	1
11	PUMP PACKING GLAND	1
12	HOUSING BEARING	1
13	DIN 625 - 6207 - 12,DE,NC,12_68	2
14	BEARING COVER	2
15	din3760-a_35x50x7-nbr	2
16	din_71412_a_m6_x_1_0_7er_6kt	2
17	SUPPORT	1
18	DIN 835 - M8 x 70 --- 22S	12
19	Washer DIN 125 - A 8.4	10
20	Washer DIN 125 - A 10.5	2
21	Hexagon Nut ISO 4034 - M8 - N	10
22	Hexagon Nut ISO 4034 - M10 - N	1
23	DIN EN 24017 - M6 x 25-C	8
24	DIN EN 24017 - M10 x 40-C	1
25	Spring washer DIN 128 - A10	1

Figure 48 Section View

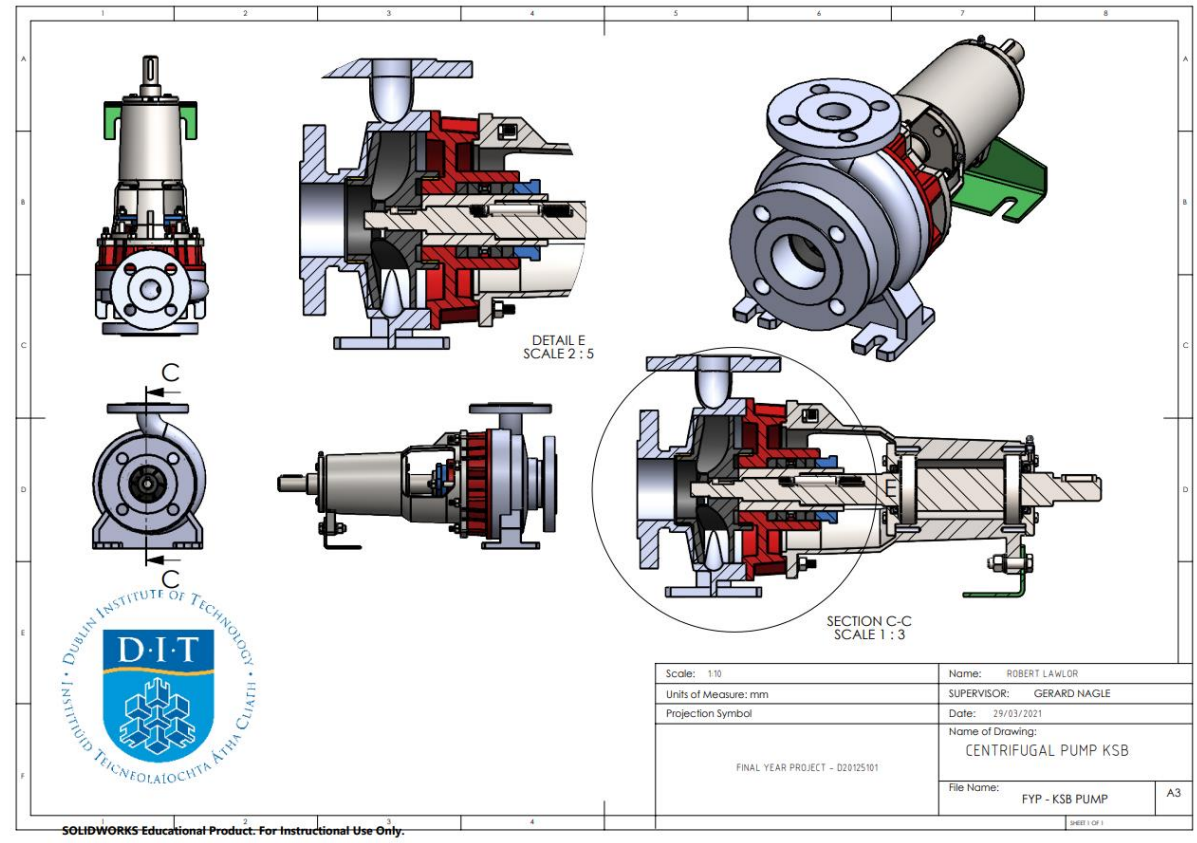

Figure 49 Pump Sectional

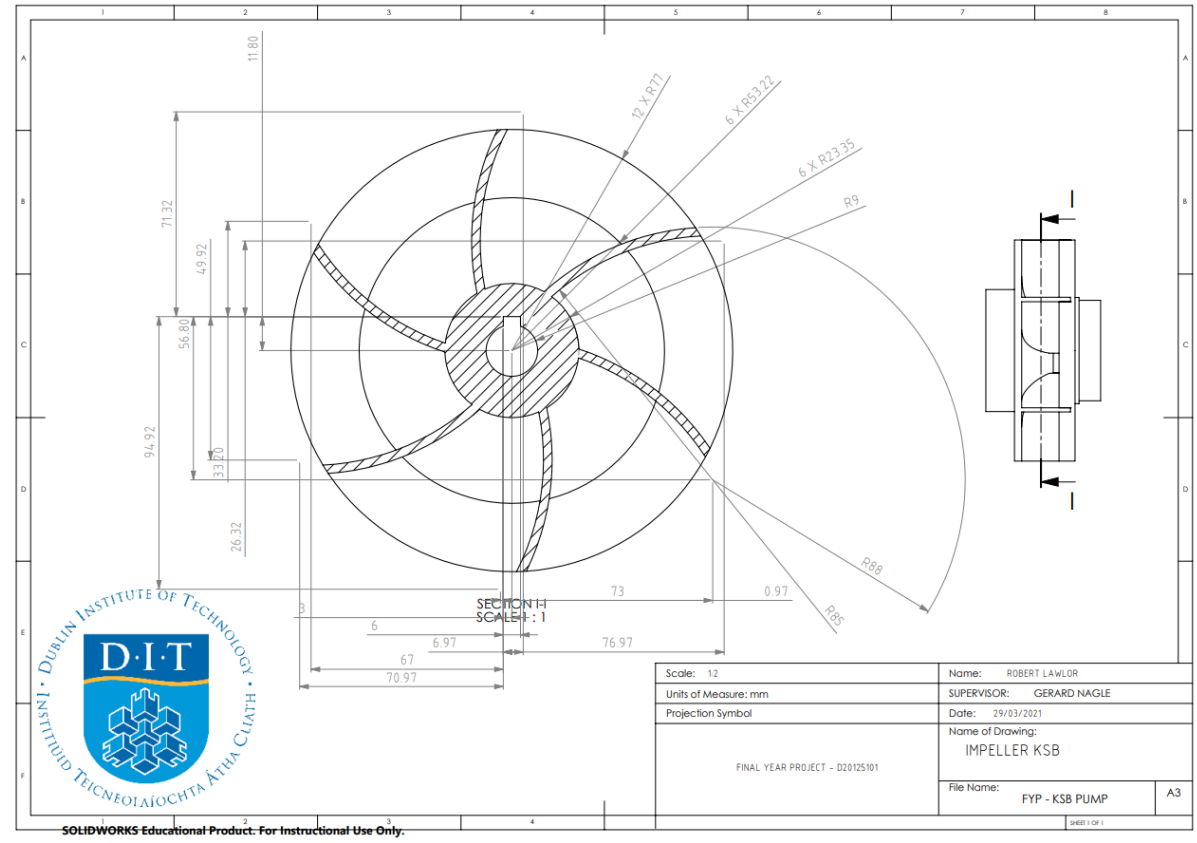

Figure 50 Impeller Dimensions

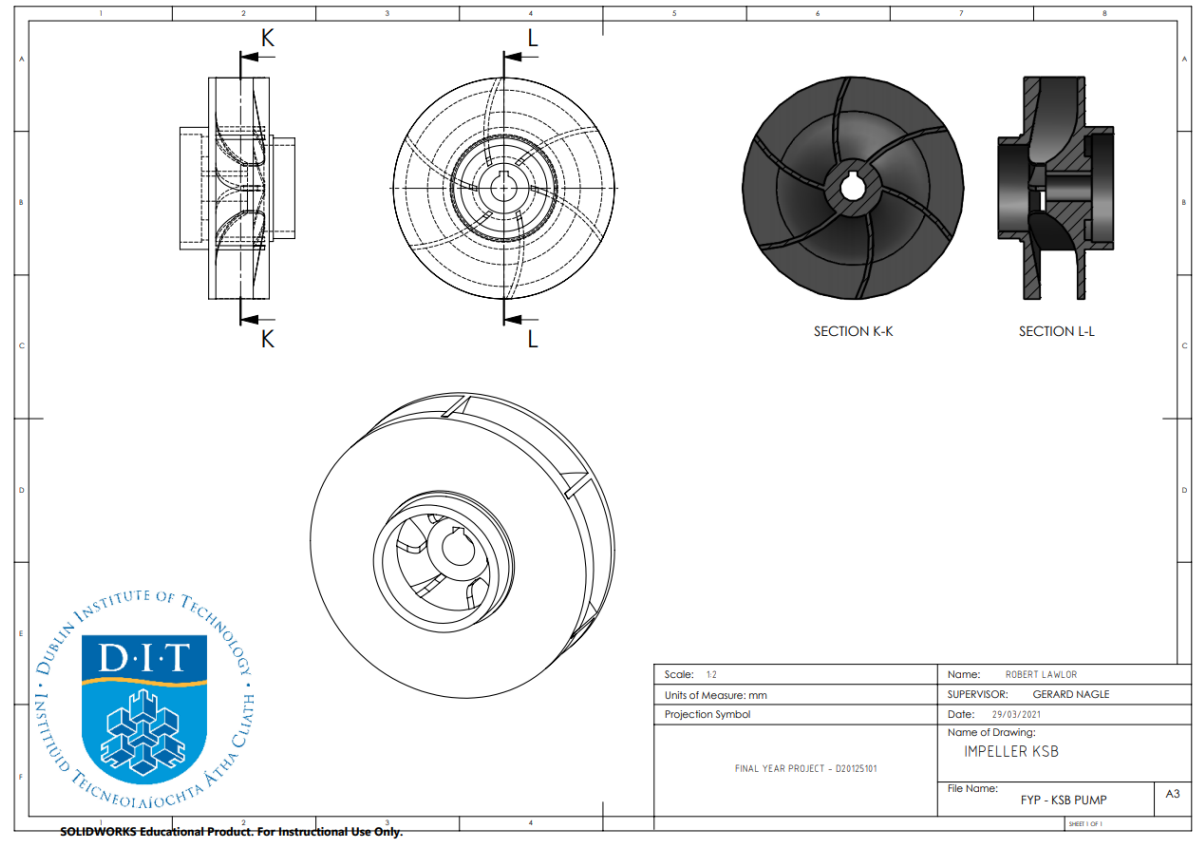

Figure 51 Impeller sectional views

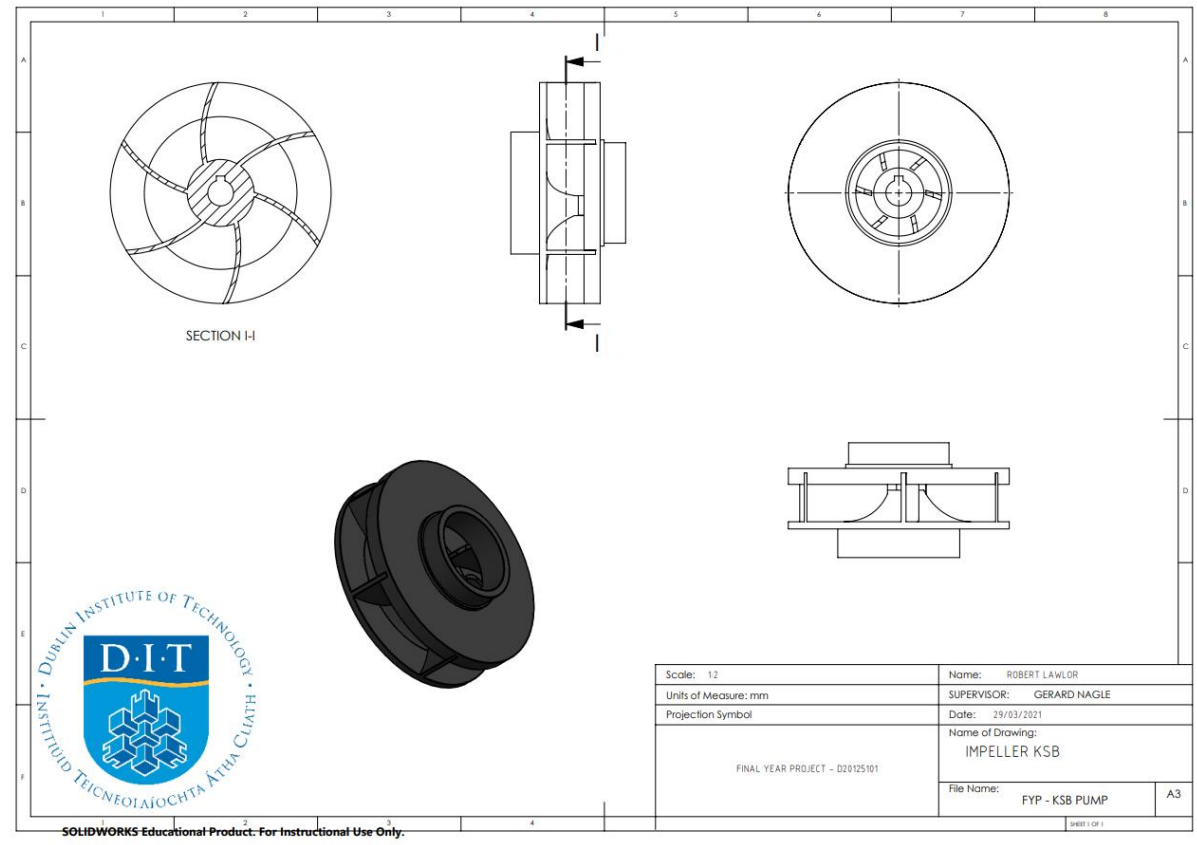

Figure 52 KSB impeller

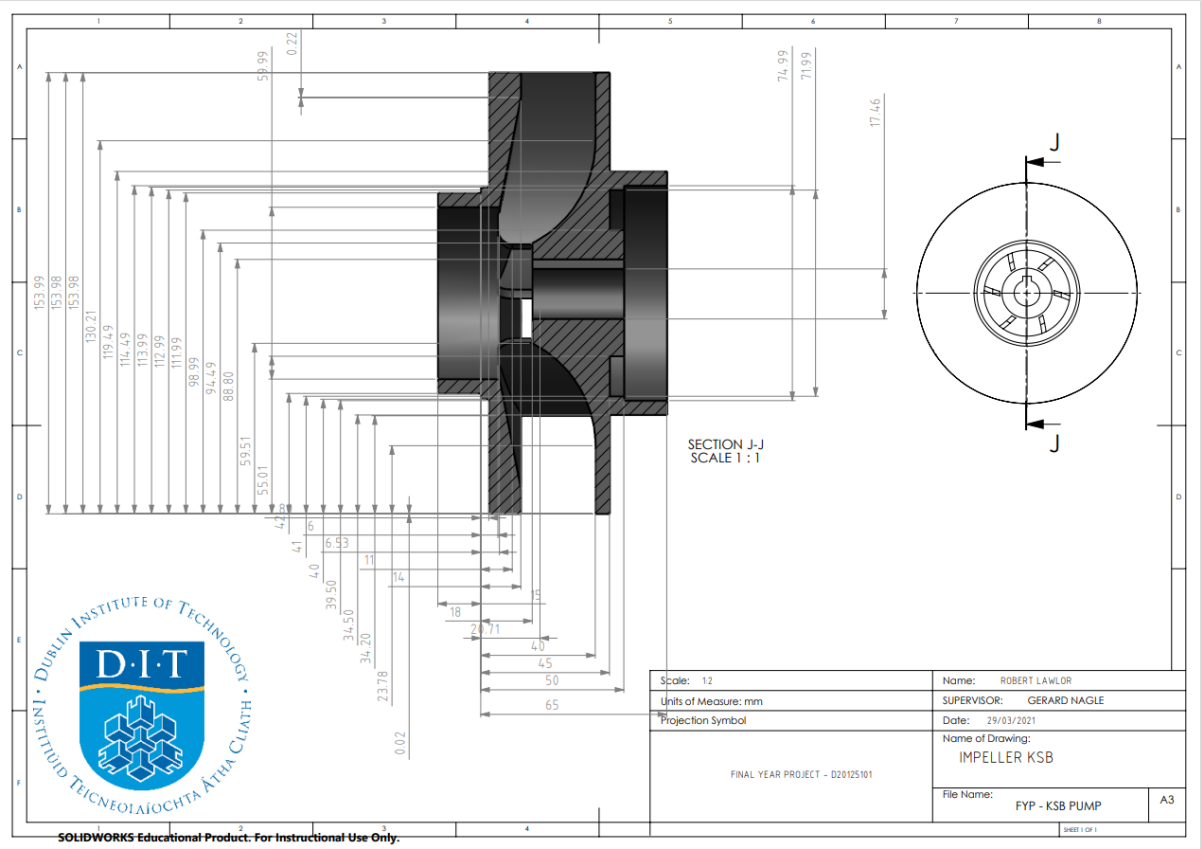

Figure 53 Side View and impeller dimensions

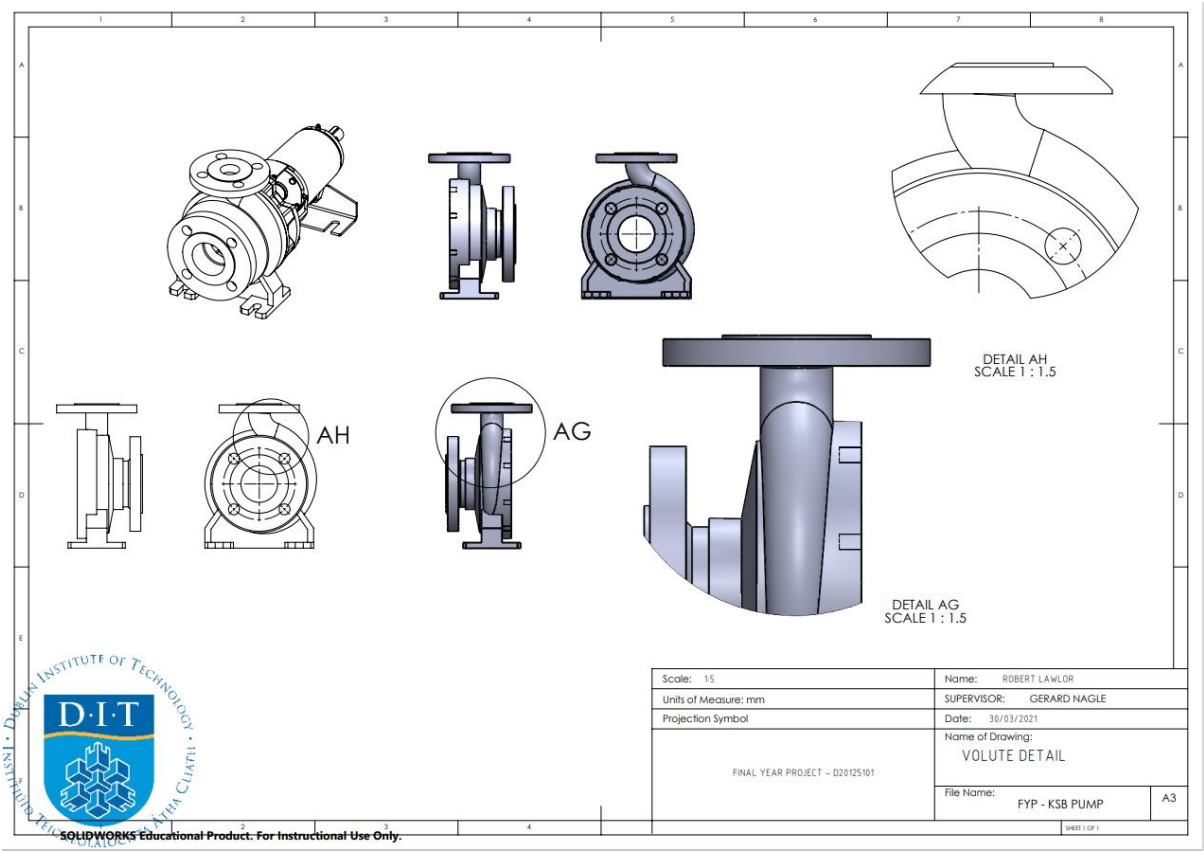

Figure 54 Volute

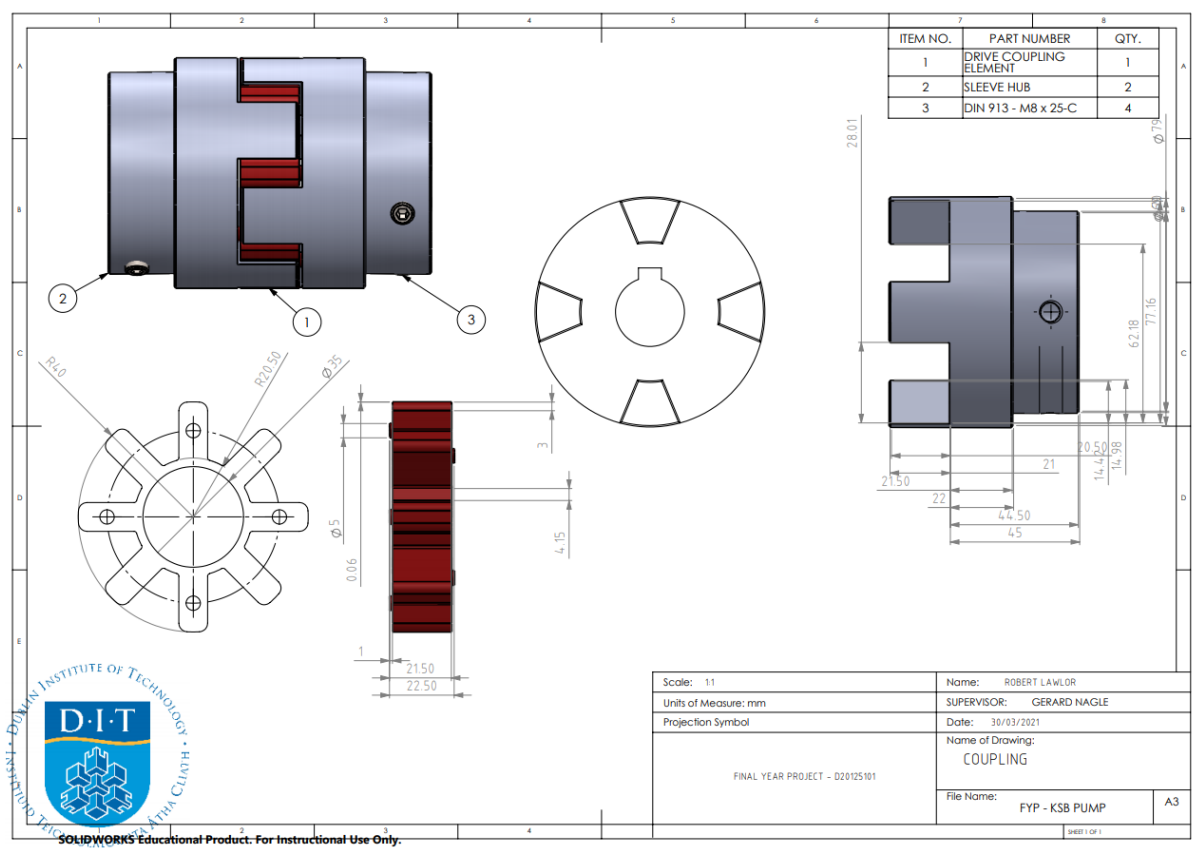

Figure 55 coupling

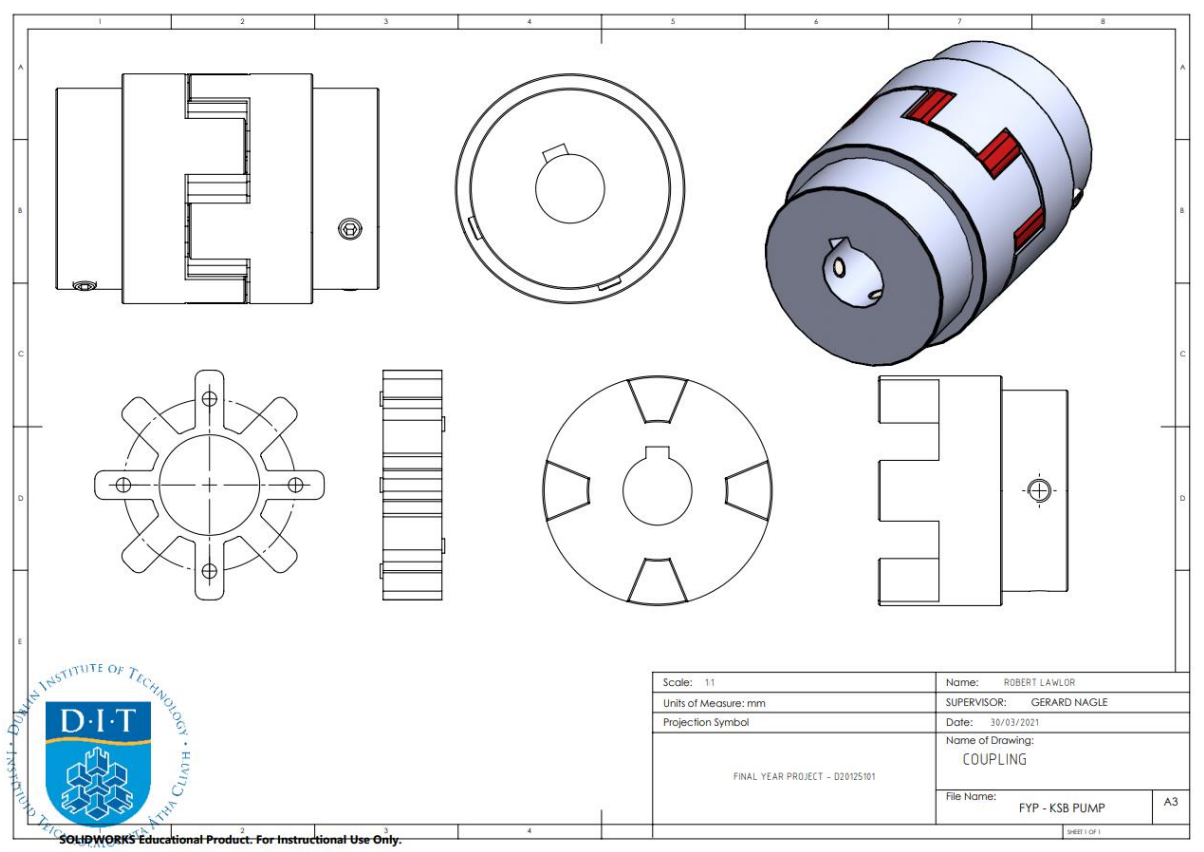

Figure 56 coupling

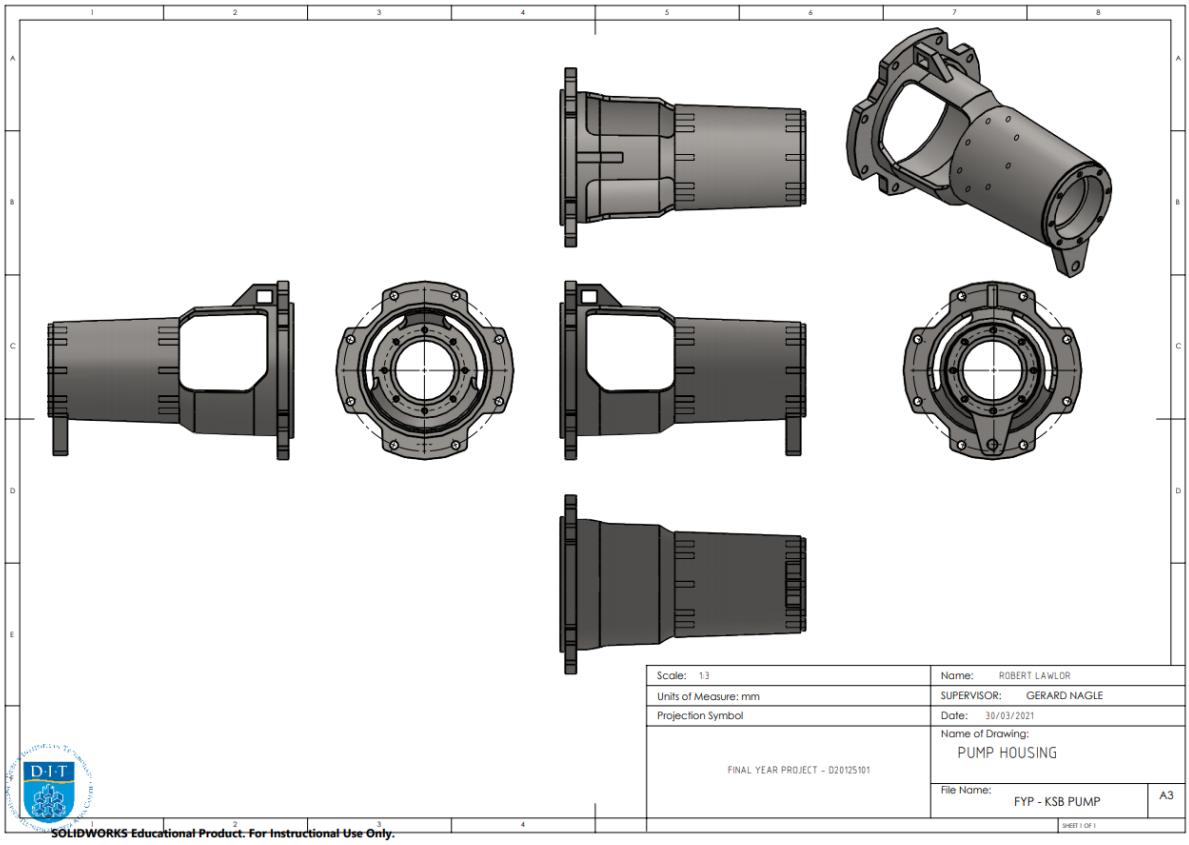

Figure 57 Housing

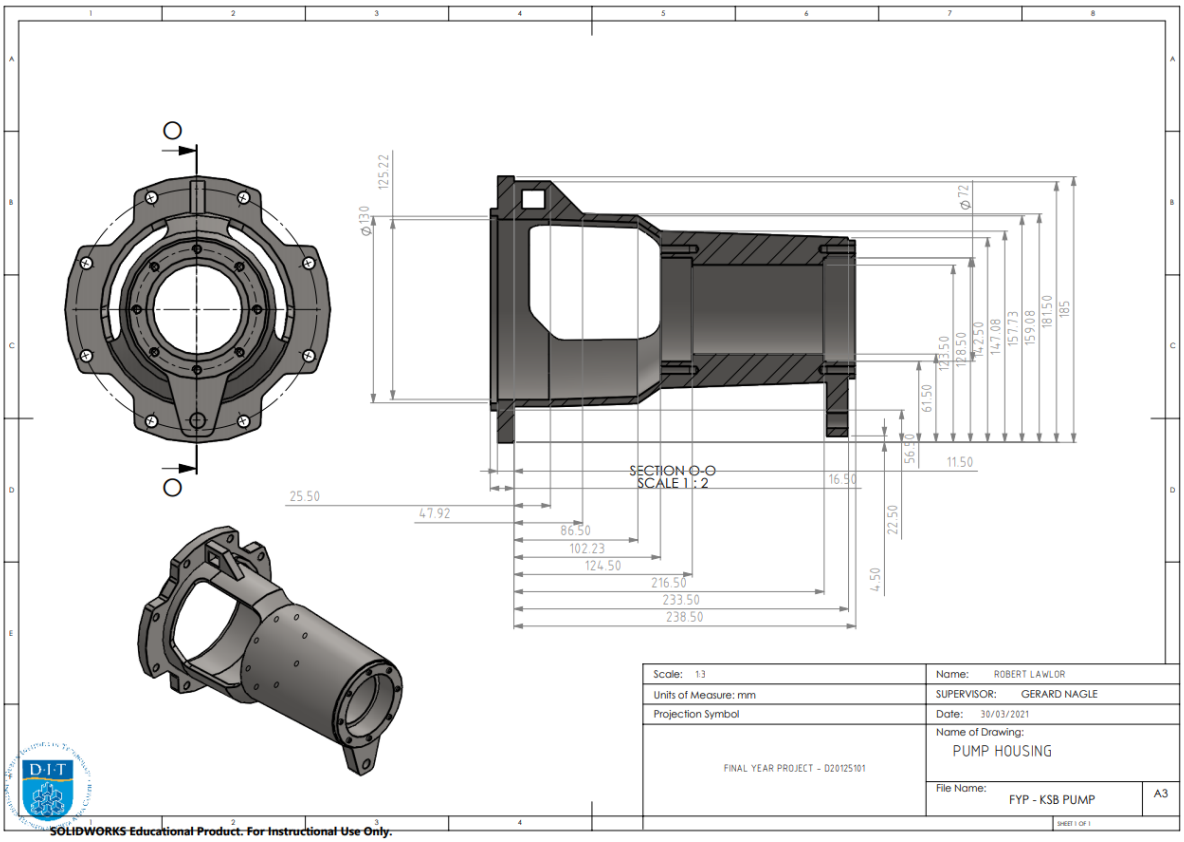

Figure 58 Housing

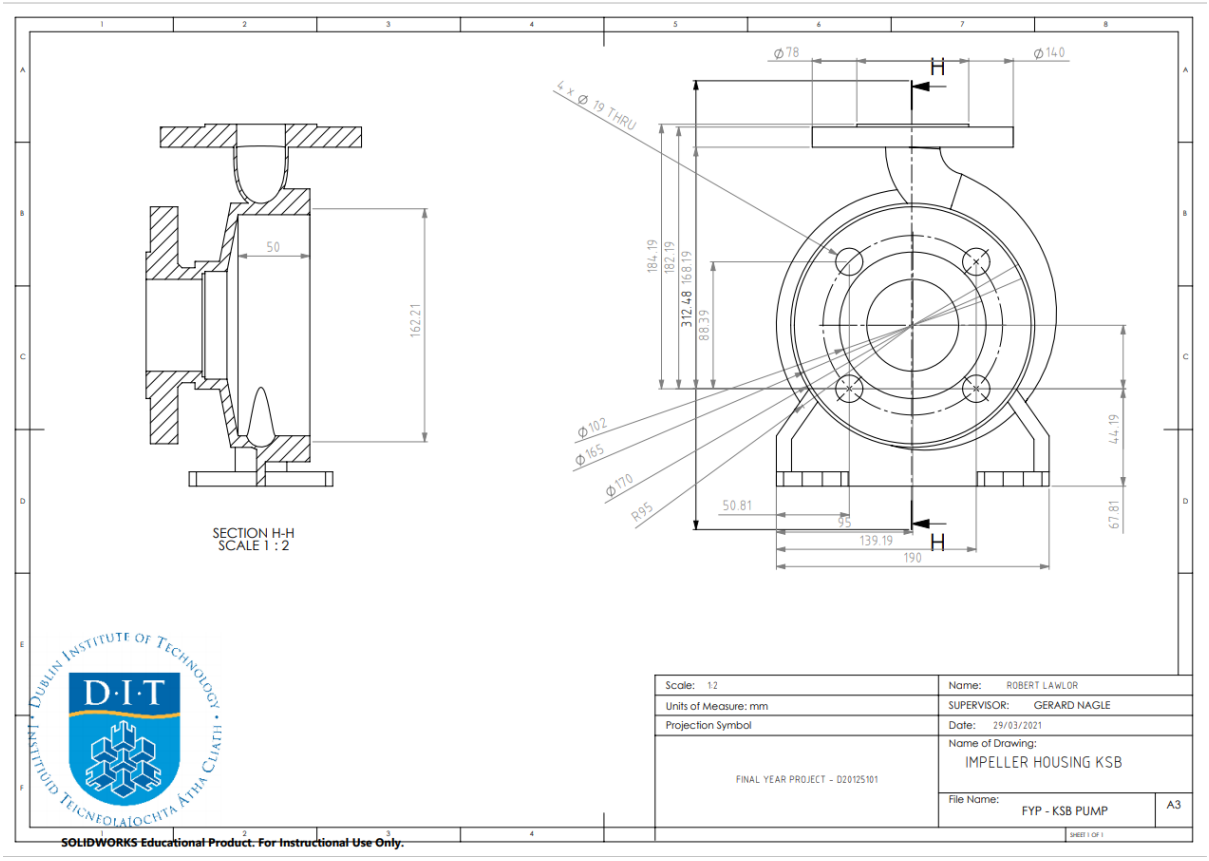

Figure 59 Volute Dimensions

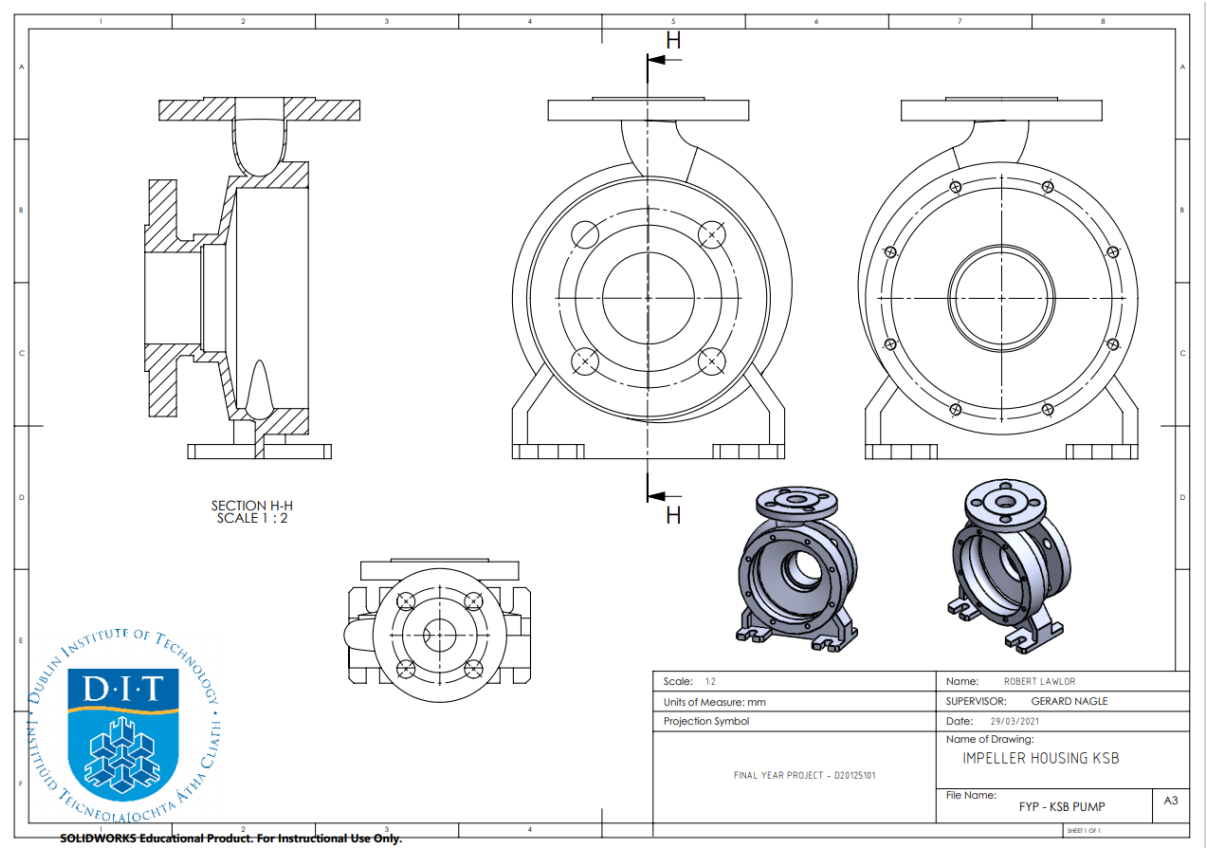

Figure 60 Volute housing

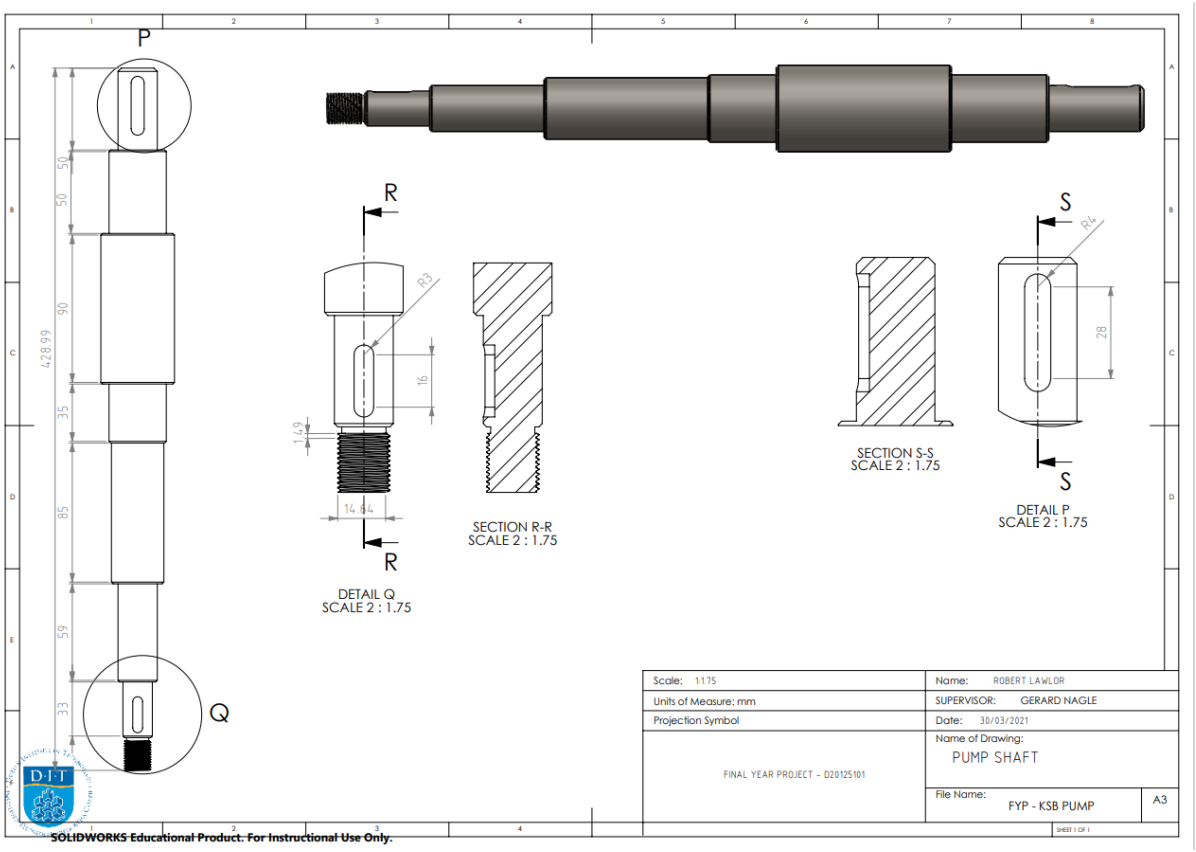

Figure 61 Shaft

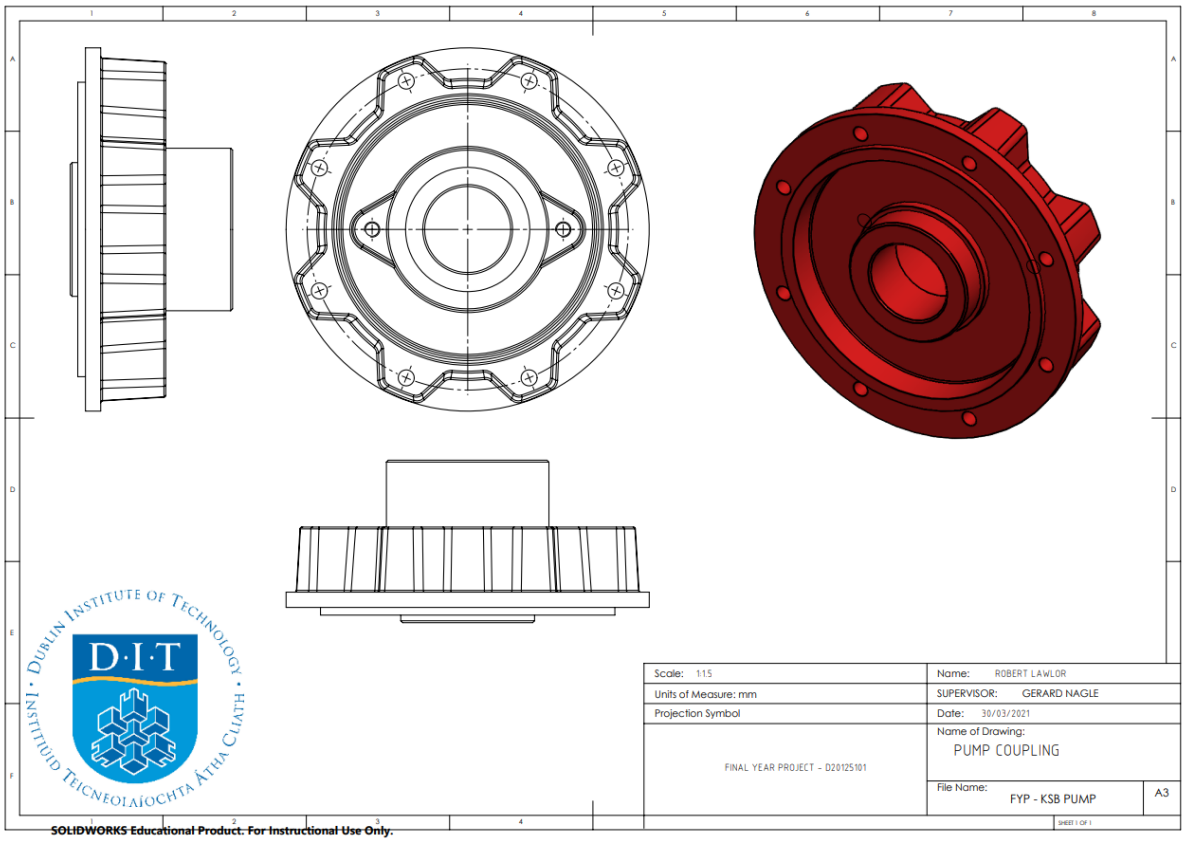

Figure 62 pump coupling

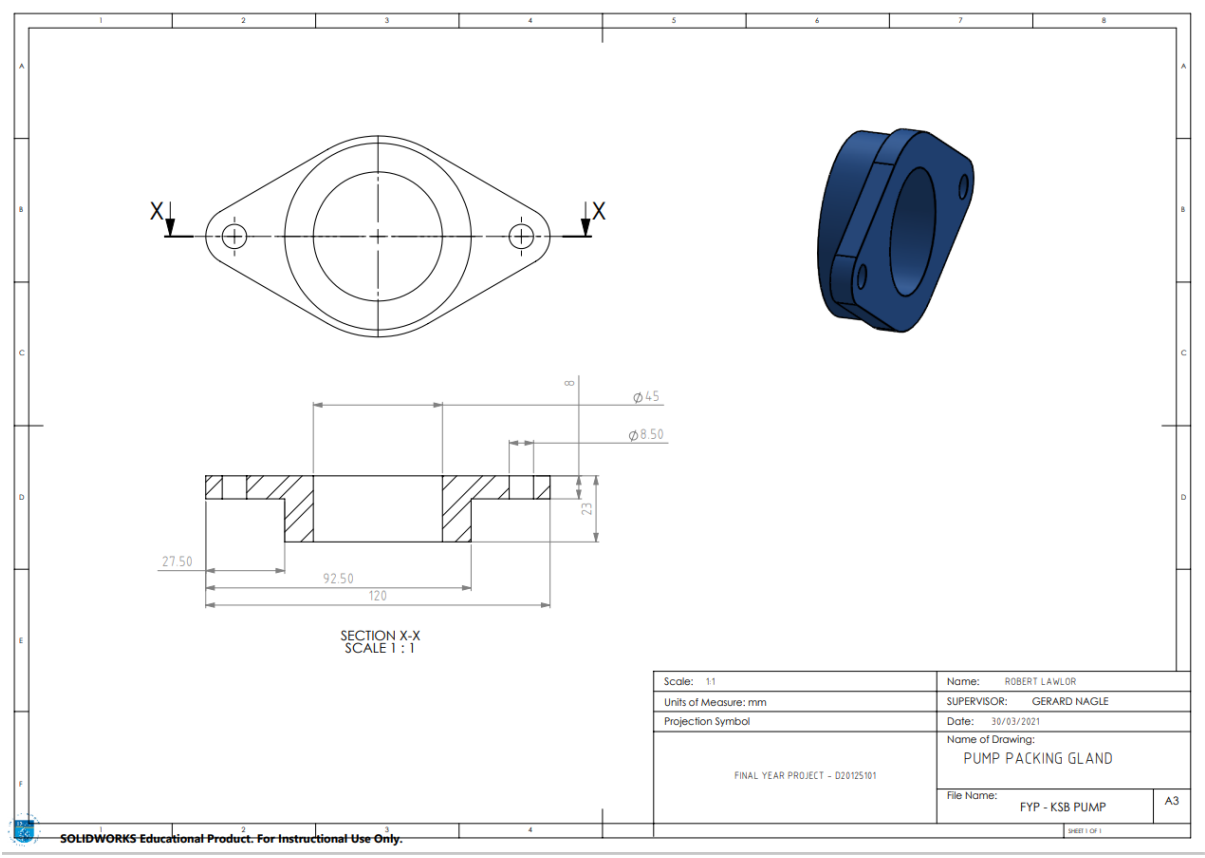

Figure 63 packing gland

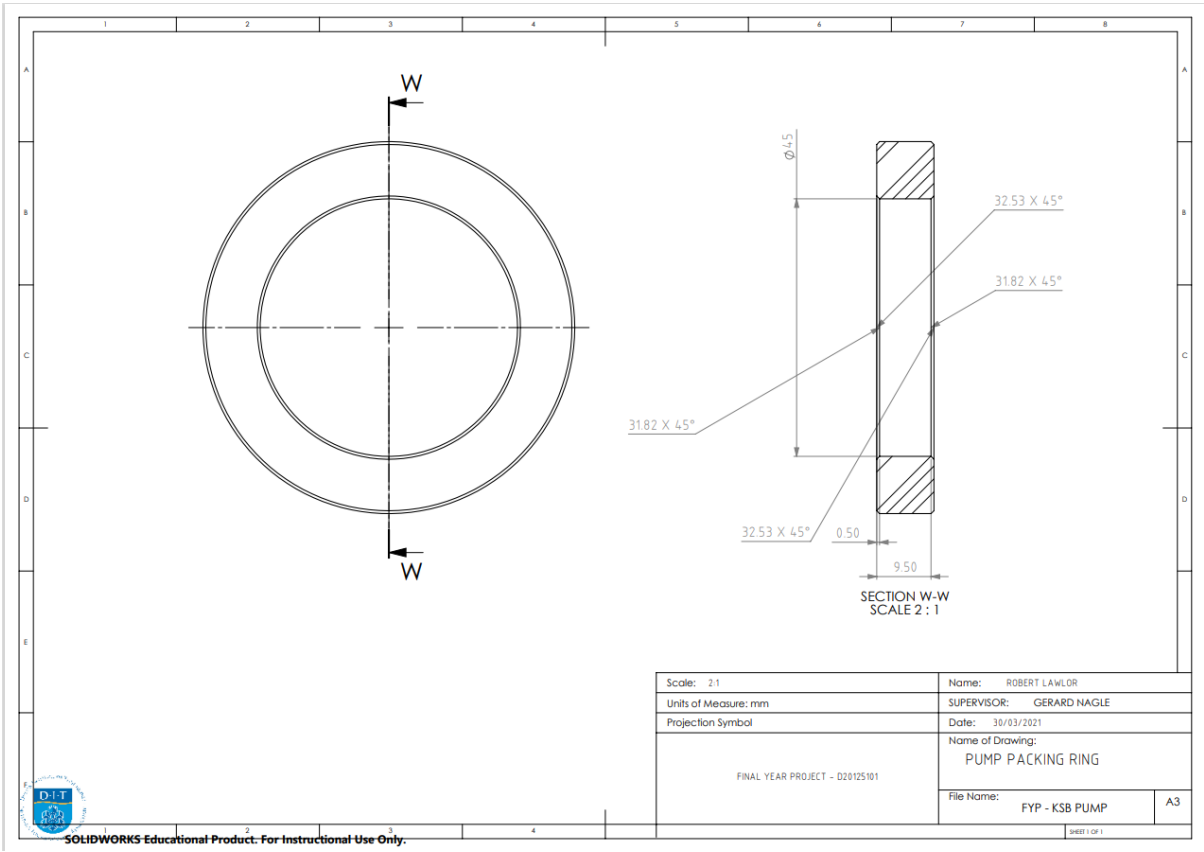

Figure 64 packing ring

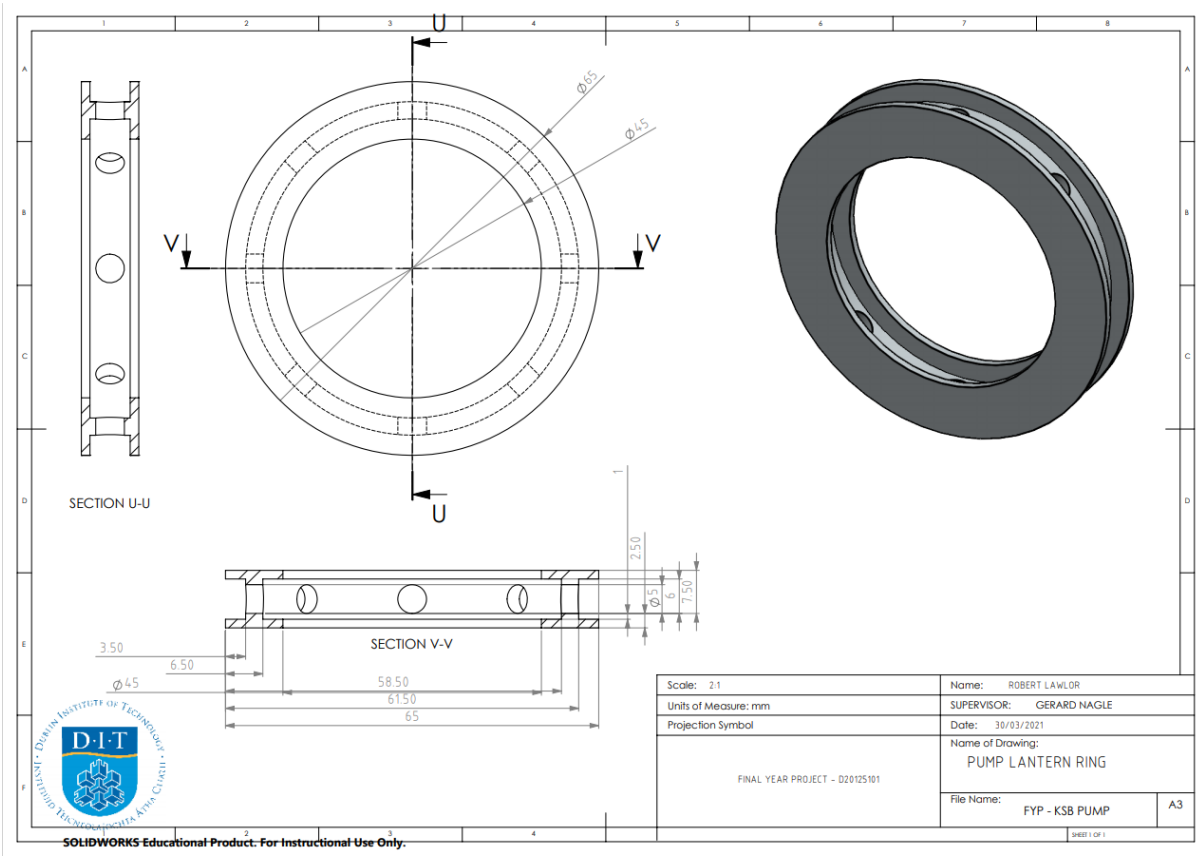

Figure 65 lantern ring

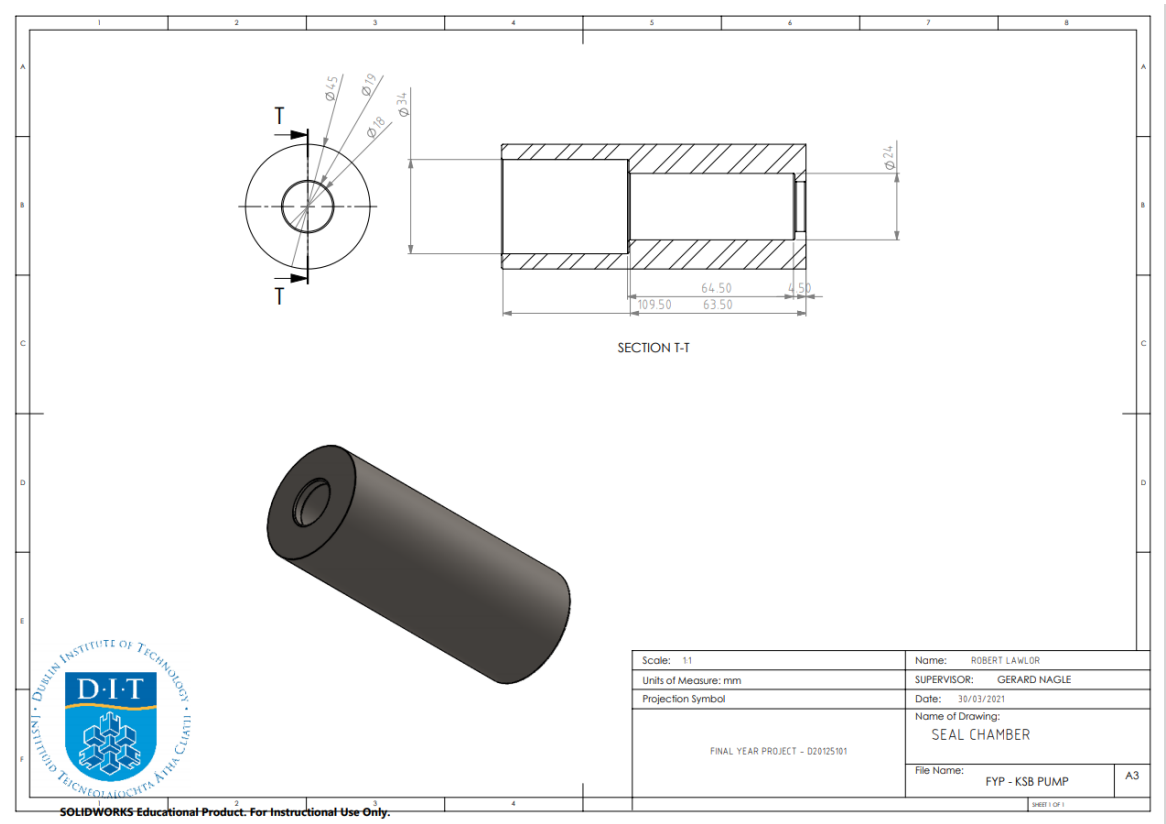

Figure 66 Seal Chamber

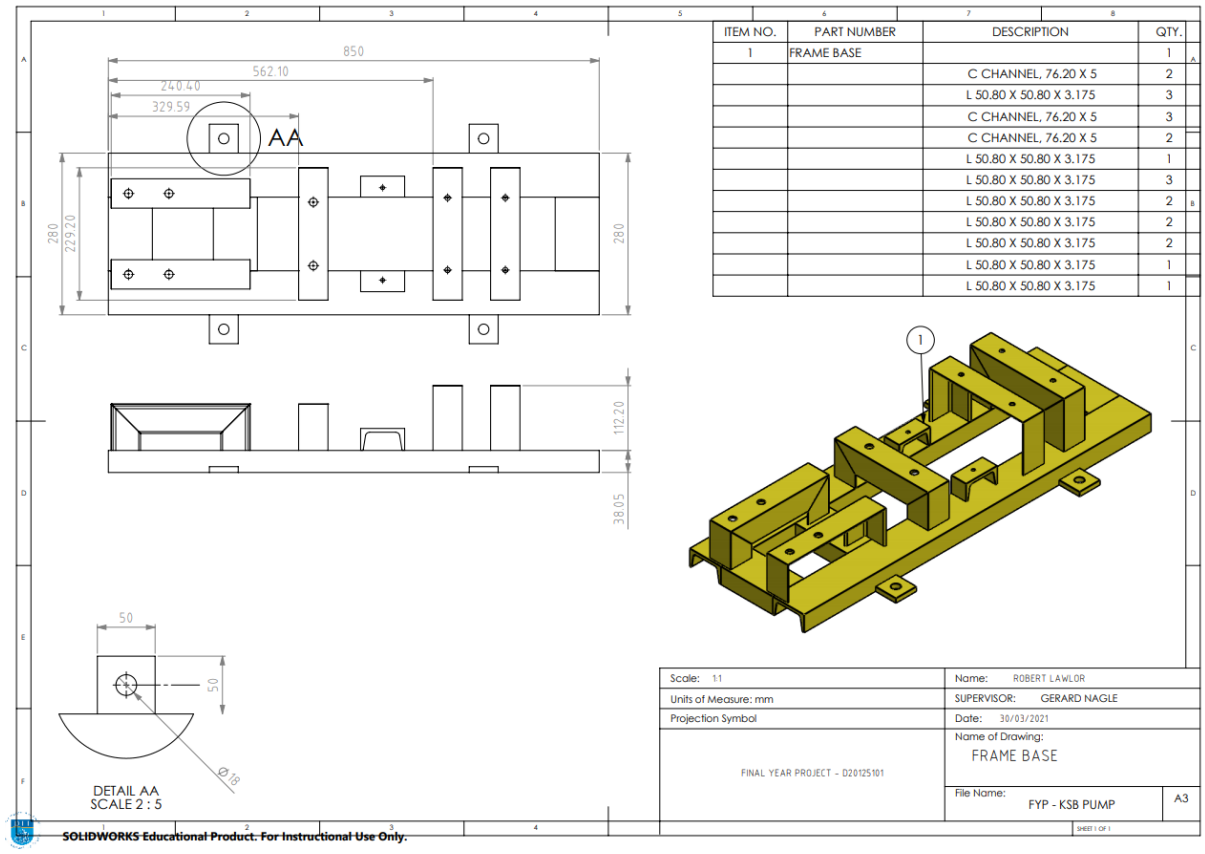

Figure 67 Base

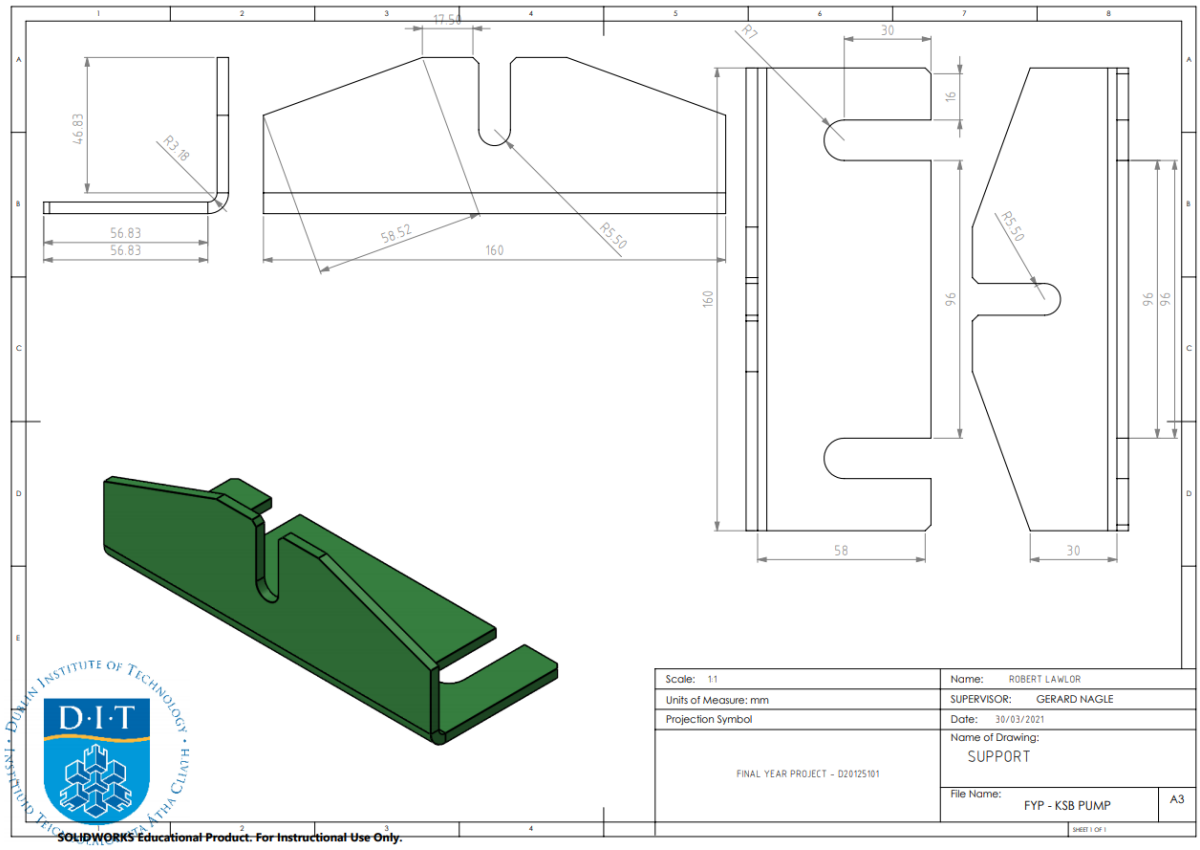

Figure 68 Support

3D-Navier-Stokes-Calculations

The 3D Navier-Stokes calculations allows for a broad range of objectives to be calculated by use of Computer Aided Engineering tools and applications (Gulich, 2020).

- Head at best efficiency point that minimises the hydraulic losses.
- Specific impeller outlet velocity profiles that compliment diffuser performance and stability of Q-H Curve.
- Prediction of the part load characteristic.
- Calculation of hydraulic forces.
- Calculation of flows through annular seals, impeller sidewall gaps, and rotor dynamic forces.
- Visualising flows in confined spaces.
- Unsteady calculations of Q-H curve and the unsteady pressure and velocity distributions at the impeller outlet.
- Calculation of cavity flow to determine cavitation inception.
- Calculation of the flow paths of entrained solid particles.
- Calculation of two-phase flow.
- Calculation of performance modelling the heating of near wall fluid due to wall shear stresses, turbulent dissipation, and heat transfer.

The calculations are given a physical parameter when obtained using Computer Aided Engineering. Having flow pictures allows the designer to interpret the design and characteristics. ''Post-Processing'' (Gulich, 2020) allows the designer to draw conclusions from the calculated data. This can be the averaging of velocities, pressures, forces and momentums at the inlet and outlet state of the pump. The angular momentum, total pressure and static pressure along the flow path can be drawn. Pressure distribution along the suction side and pressure side of the impeller blades. Distribution losses and the residuals of mass, momentum, and energy in various control surfaces. Over the graphical representation of flow patterns, velocities and streamlines prove essential to the designer.

Computational Fluid Dynamics

To understand the flow through a pump and around an impeller CFD systems can be used. The flow inside the pump is highly complex and includes turbulence, secondary flow, cavitation, and unsteadiness. This advanced technology is important as it tracks the flow phenomenon through the pump. This will show the actual flow pattern which the fluid will take. Knowing this allows the engineer to design an optimum flow through the different components. It can predict pressure distribution, patterns of flow and the head-capacity curve. It can also be used to see what effect the turning impeller will have on the fluid. If the fluid is not able to follow its most efficient path, a re-design should be considered. It can also be used to estimate the flow rates and pressure heads generated by the pump. This is important so the pump is manufactured to the correct spec for which it will operate. Recommendations can then be made on the correct operation conditions and design. The use of CFD allows the engineer to simulate the pump and impeller operation under different conditions.

Normally the CFD codes provide three calculation methods for the analysis of turbomachinery flows, the Multiply Reference Frame (MRF), the Mixing Frame and the Sliding Mesh. The first two methods are steady state methods. In the MRF method, the rotor is kept as a fixed position and the governing equations for the rotor are solved in a rotation reference frame, including Coriolis and centrifugal forces, while the stator is solved in an absolute reference frame (Dick, 2001)

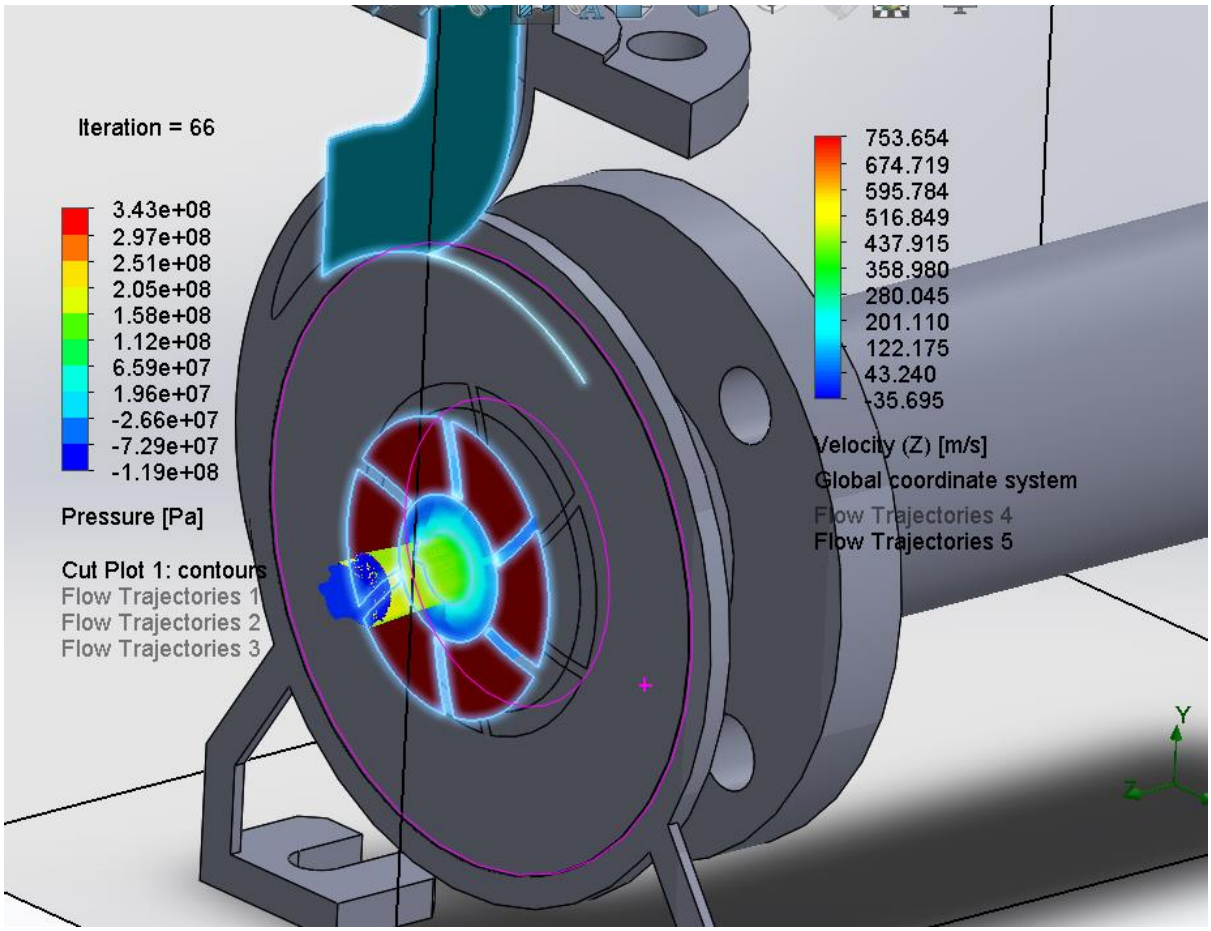

Figure 69 CFD simulation

A CFD simulation was carried out to analysis the flow and flow paths through the impeller and volute casing. Ideally the simulation should have been carried out on Simerics – which operate mainly with CFturbo. Due to obstacles encountered along it was necessary to carry out a CFD simulation using the designed impeller on SOLIDWORKS. Lack of understanding and not enough experience led the simulation to run into a few problems.

Firstly, a rotating region was selected but when simulation was running, there was no rotation occurring. The creation of lids and extrudes to fully seal the casing and impeller and direct the flow caused difficulties. The flow path can be seen to be directed into the shaft keyhole and not fully follow the path laid out by the impeller blades. Velocity in the keyhole reached 360m/s – 420m/s which is un-operational. The flow never made it to the outlet so outlet pressures and head cannot be successfully determined.

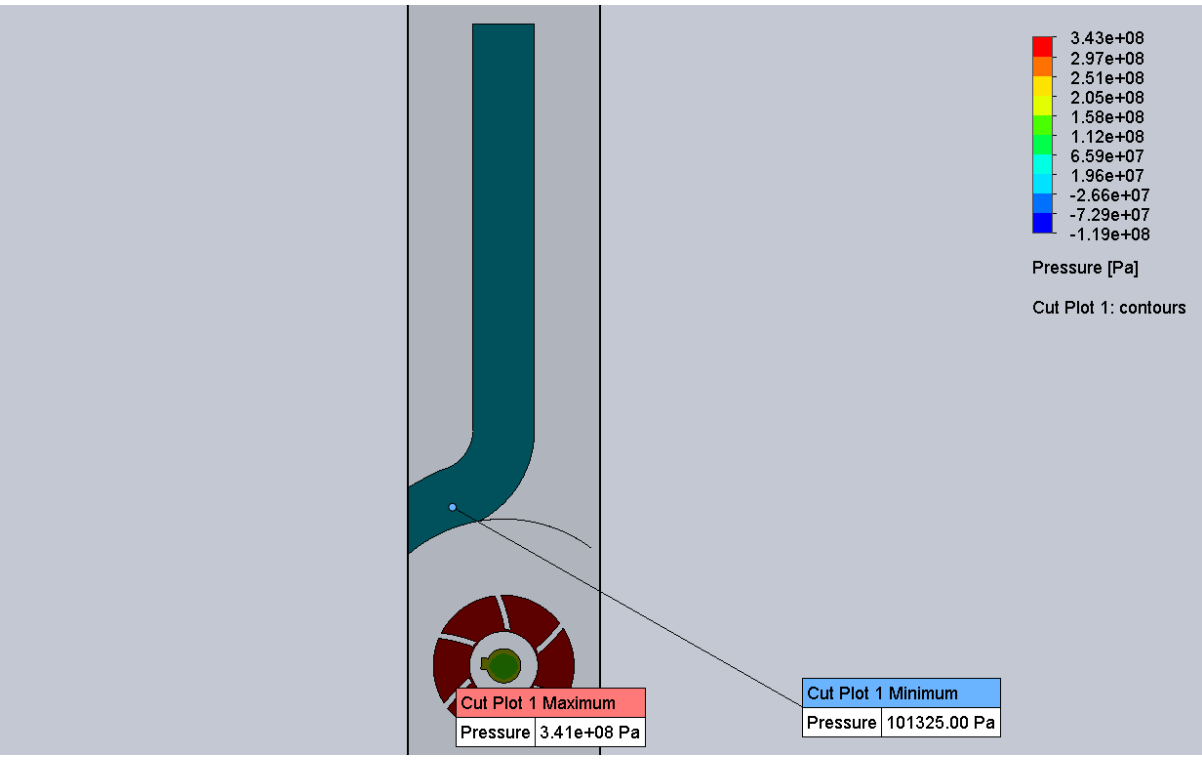

Figure 70 Cut Plot

The cut-plot in Fig.42 shows a maximum pressure of 3.41e+08 Pa which equals 341,000,000 Newton / Square metre. The pressure applied in the FEA analysis of the impeller was 0.06 Newton / Square metre means under these conditions the impeller would be deformed within seconds. These results show how vital it is to select the correct material to manufacture the impeller from, so it operates well within limits in terms of pumping pressures and material strengths.

The minimum pressure measured in the cut-plot is 101325.00 Pa – atmospheric pressure. This shows that no fluid made its way out of the impeller to the outlet.

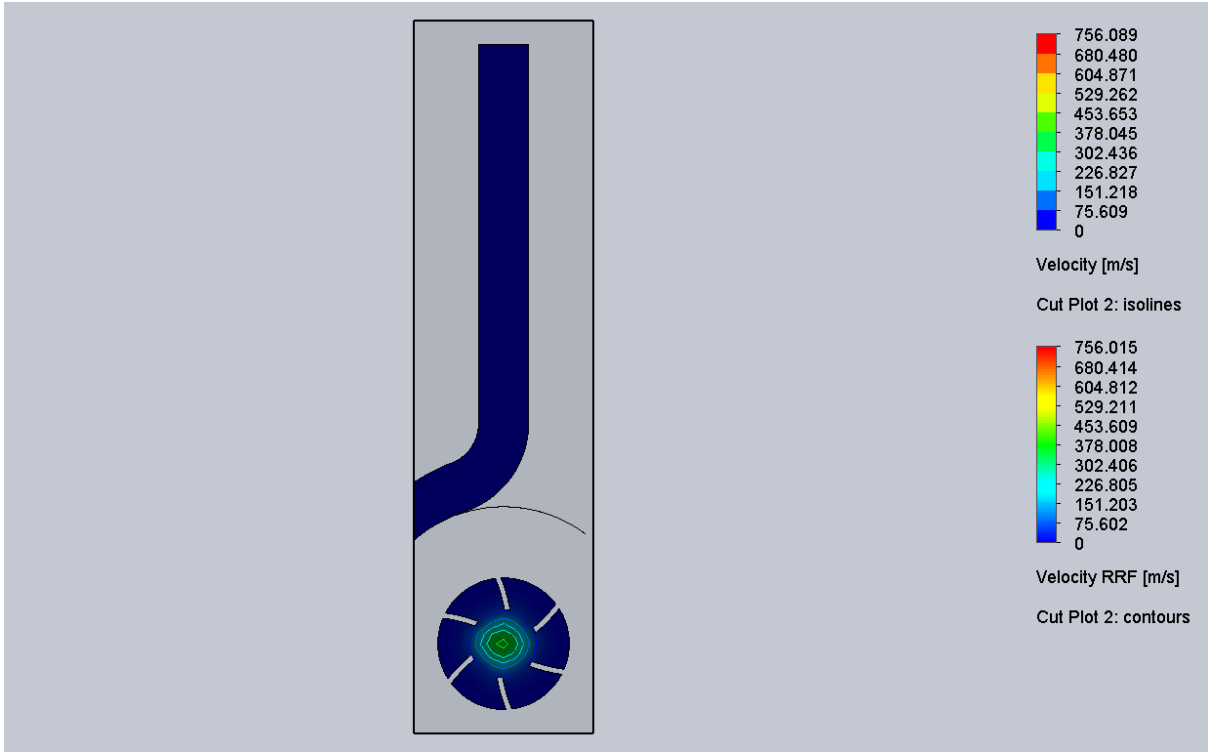

Figure 71 velocity Plots

The velocity in the rotation reference frame is measure at 0 m/s and in cut plot 2 is measures again as 0 m/s. this suggest an error was made somewhere along the setup of the CFD simulation.

CFturbo supports the simulation packages Ansys and Simerics. To export the file to SOLIDWORK leaves a lot o0f geometry errors in the package. Using CFturbo to create a conceptual design and then meshing using Ansys or AutoGrid is best practice for industry. CAD packages such as Creo and SpaceClaim are best suited for transferability between software's. Simscale simulation software was used to validate the design and perform a test performance, optimise durability and improve efficiency. The design had to be altered to facilitate the simulation, so a new casing and volute were designed.

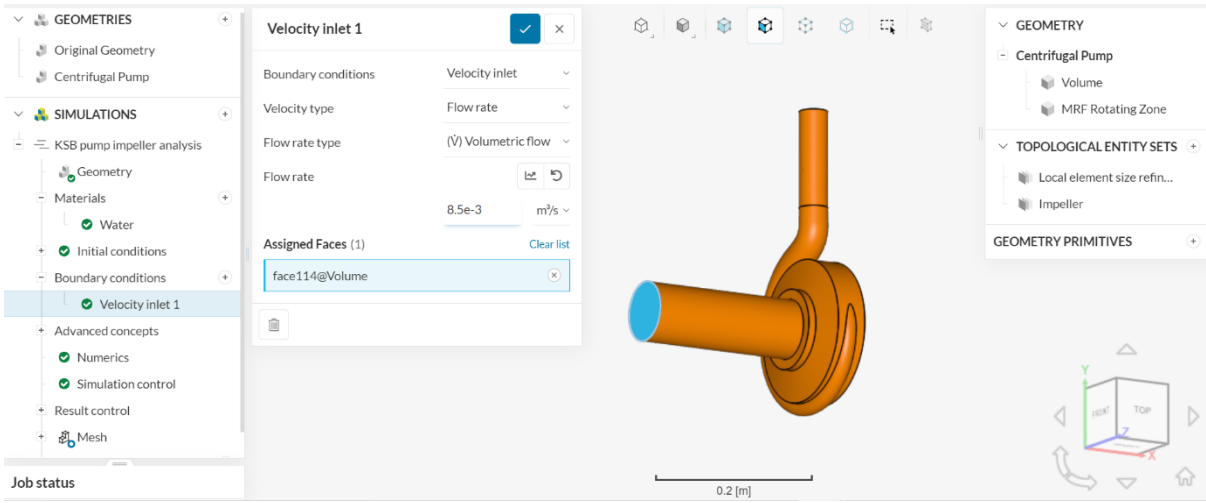

Figure 72 centrifugal pump Simscale simulation

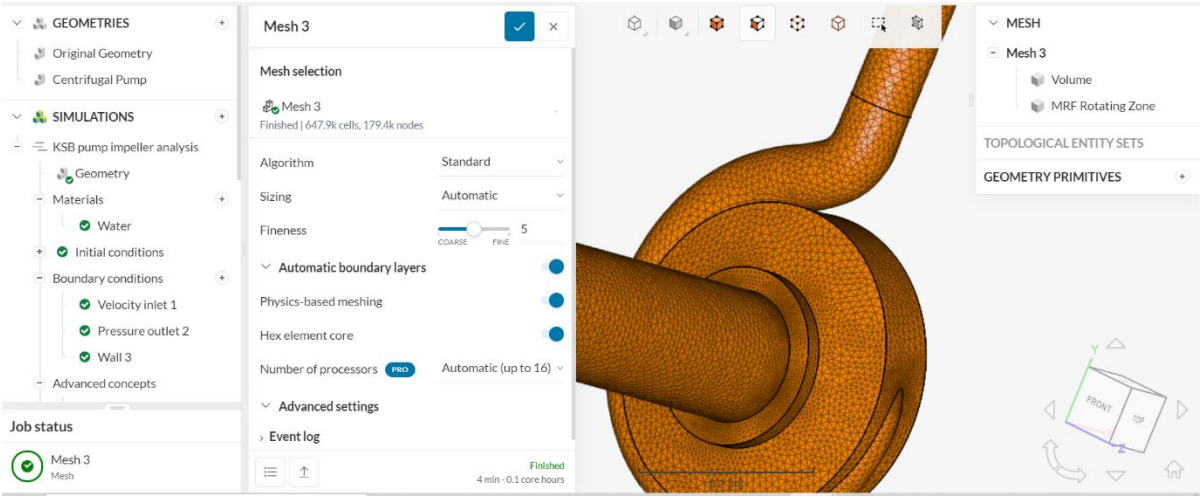

Figure 73 KSB pump mesh

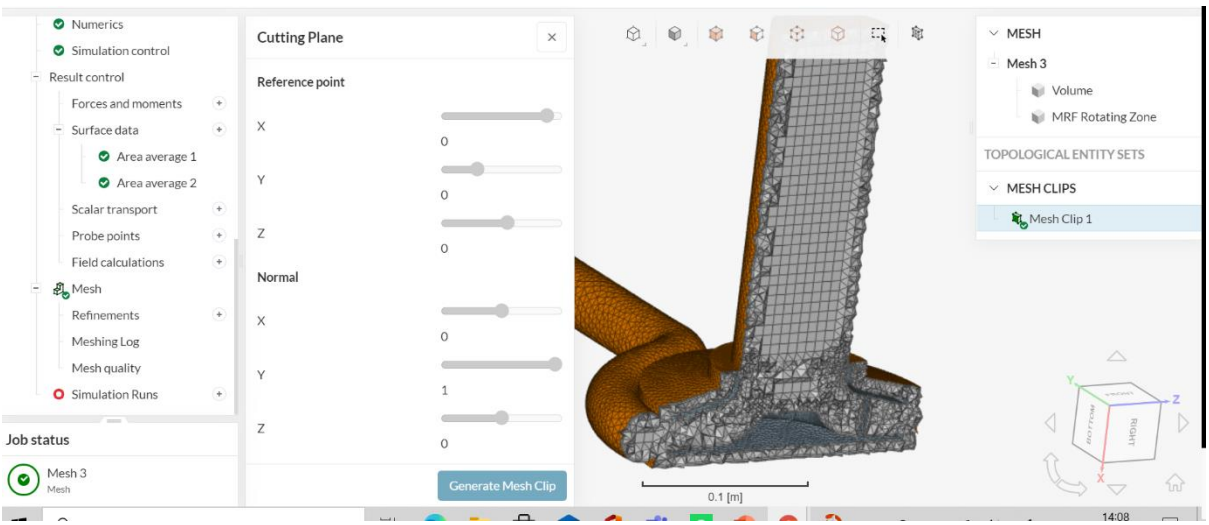

Figure 74 mesh cut plane

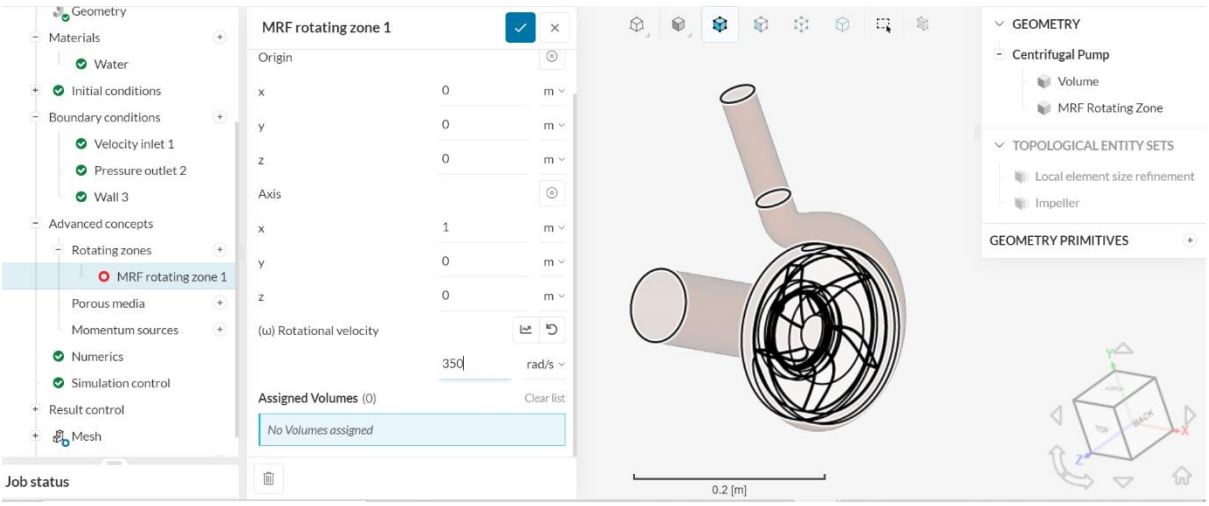

Figure 75 rotating impeller within casing

Simulation results

The results of the simulation are best provided by the test ran by Simscale. The design parameters set out show the pressure distribution around the impeller and blades. The goal of this project was to analysis the performance of a pump impeller using the multiple reference frame. This steady state approximation uses cells moving at different translational speeds. Because of the obstacles of performing a flow simulation on the designed impeller it was decided to run a simulation on a 5-blade impeller on Simscale. The results provide an insight into the extent of pressure rise and falls, created by the pump for a given volumetric flow rate and rotational speed.

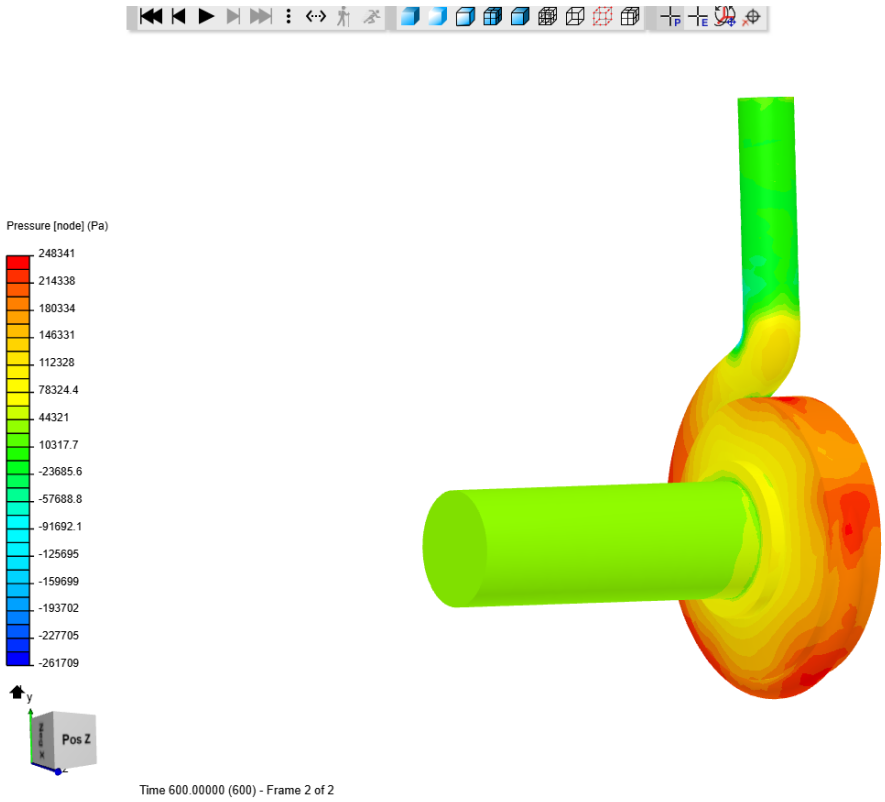

Figure 76 Pressure Plot

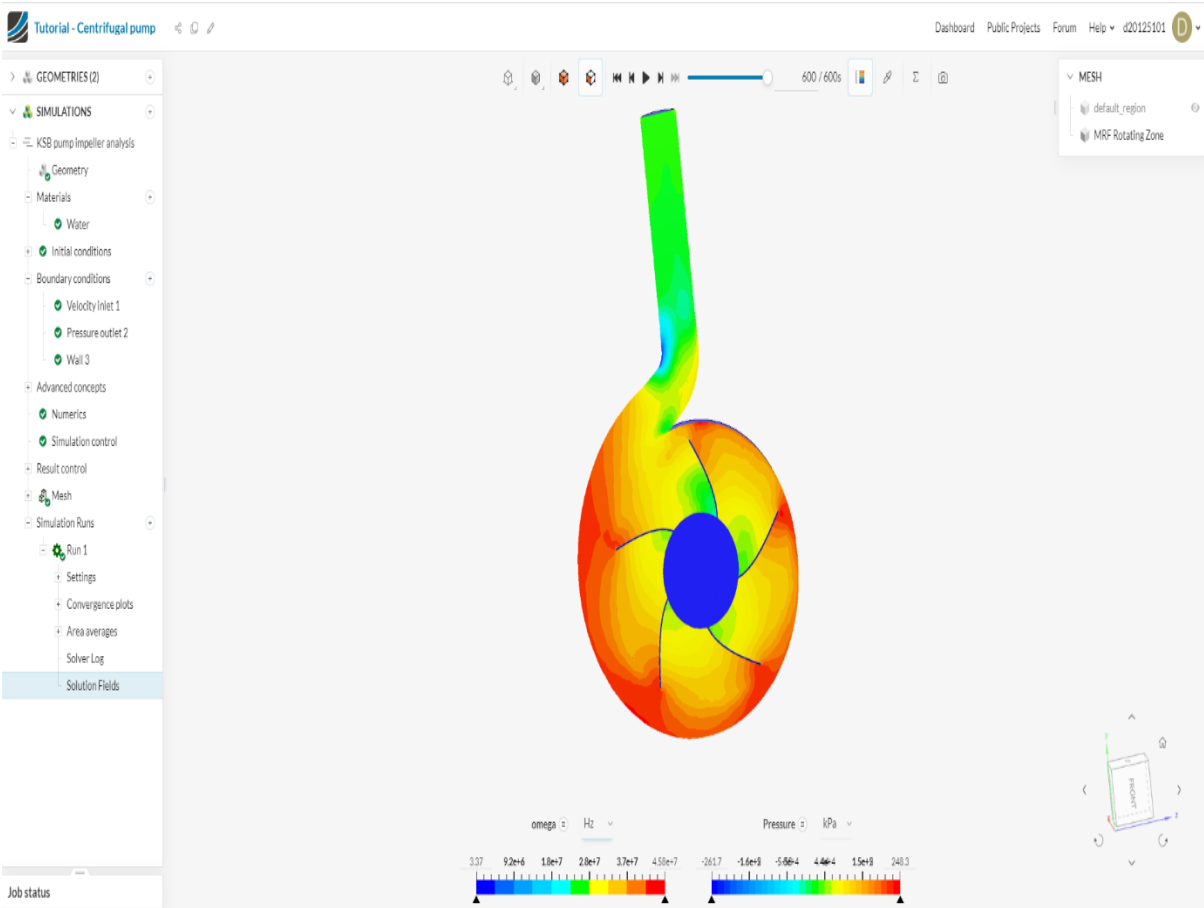

Figure 77 Pressure kPa

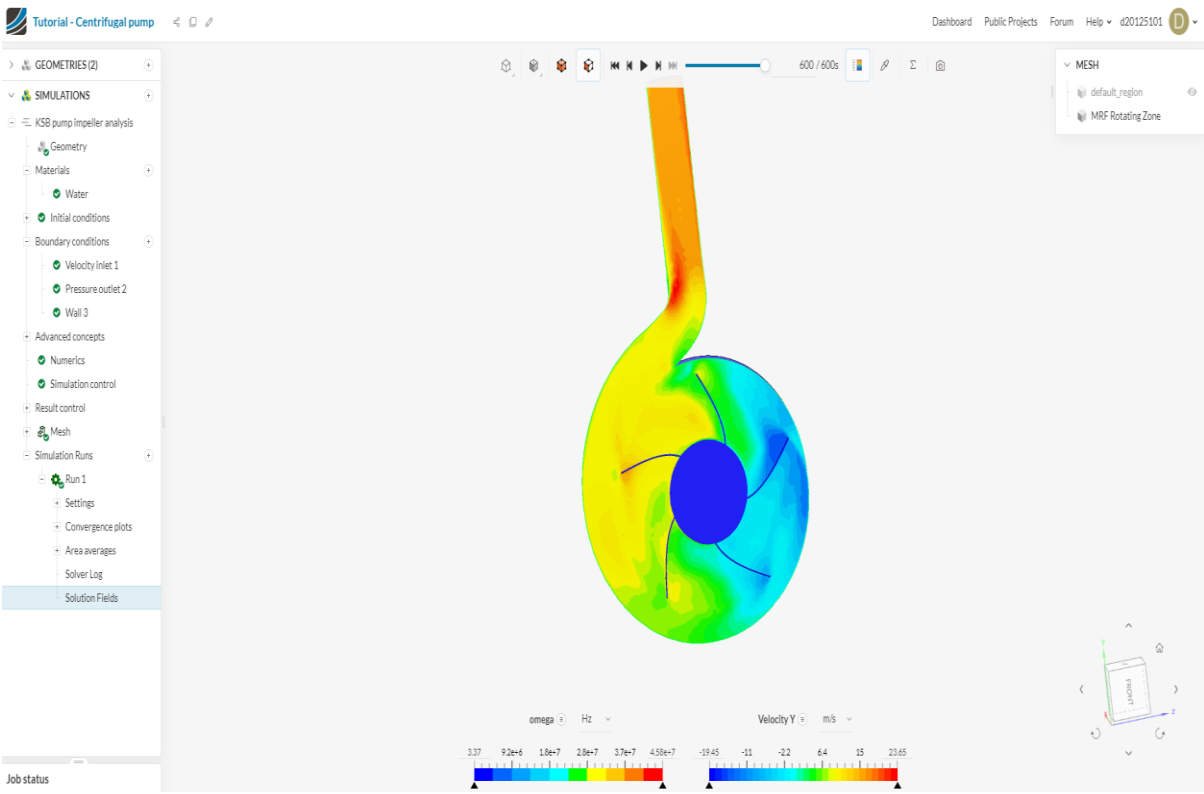

Figure 78 Velocity in Y direction

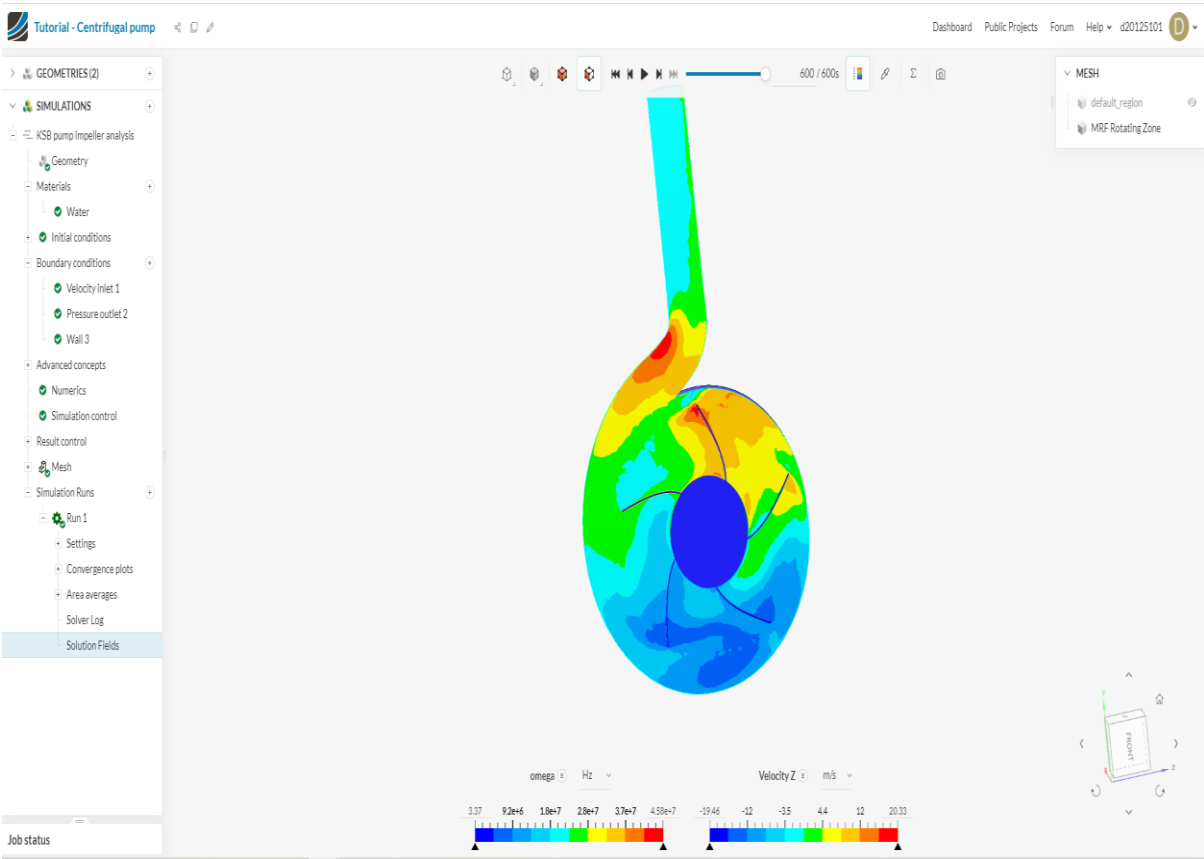

Figure 79 velocity in Z direction

In figure 77 the max pressure observed is 23.65 kPa . This is the outlet pressure in the volute. The pressure distribution around the blades can be seen. The pressure side at the front of the blade can be seen in the darker colour red. The low pressure around the back of the blade is seen in green. Pressure is greatest at the leading edge of the impeller blade tips. This is important when selecting the material to manufacture the impeller and selecting the size. The geometry can be seen influencing the pressure gradient. The spacing between the casing and impeller tips affects the stresses caused by the pressure and overall head. Areas of lower pressure are seen around the cutwater where areas that can create vortexes exist. This can cause cavitation in the apparatus.

The velocity in figure 78 shows a max velocity of 23.65 m/s in the Y direction. The built up of velocity as the impeller rotates can be visually seen as the velocity increases from the cutwater, rotating clockwise until the fluid is able to escape out the volute. The velocity increase as pressure is increased between the impeller and casing. Maximum velocity is generated between 6 and 12 o clock on the impeller.

Uncertainties and conclusion

Computer Aided Engineering tools can be of extreme benefit when applied correctly to problems. Options for physical modelling, grid generation, numerical solution and post processing can give the designer vast knowledge from which they can be applied to the selection process of materials and parameters. ''Uncertainties'' result from a lack of knowledge, therefore they cannot be quantified, ''errors'' are made due to avoidable simplification or negligence (Gulich, 2020). Uncertainties and errors can be caused by programs or the designer, either way it is important that they are rectified and assessed, and the problem is recalibrated in the shortest and most efficient time frame. Modelling errors can be common in design and manufacturing. The true characteristics of a material may differ from those programmed such as a Reynolds Number of a material. The real turbulence or the roughness of a material that will be used in manufacturing. Simplifications of geometry are made. Numerical errors can be the difference of an exact solution and actual solution obtained when manufactured. Rounding errors and residuals errors can lead to this. User errors due to lack of knowledge about the tool or not enough experience can lead to miscalculations. The software packages can have problems integrating with one another. CFturbo is a brilliant software if the supporting packages are at hand. If the resources and computers in TUD Bolton St were available during this project better results may have been obtained. The uncertainty of carrying out an analytical report without the aid of high-power computers or certain software packages can sometimes hinder the goals wanting to be reached.

Bibliology

Asuaje, M. B. F. K. S. N. R. &. R. R., 2005. Computer-aided design and optimization of centrifugal pumps. *Proceedings of the Institution of Mechanical Engineers,* 219(A3), pp. 187-193.

CFturbo, 2020. *Design steps for radial and mixed-flow impellers.* [Online]
Available at: https://cfturbo.com/software/impellers
[Accessed 03 December 2020].

contributors, N. P., 2021. *Nuclear-power.net.* [Online]
Available at: https://www.nuclear-power.net/nuclear-engineering/fluid-dynamics/centrifugal-pumps/eulers-turbomachine-equations/
[Accessed 04 April 2021].

Dick, E. &. V. J. &. S. S. &. V. V. J., 2001. *Performance prediction of centrifugal pumps with CFD-tools.,* Ghent: Ghent University.

Gulich, J. F., 2020. *Centrifugal Pumps.* 4 ed. Villeneuve : Springer.

Gülich, J. F., 2020. *Centrifugal Pumps.* 4 ed. Berlin: Springer .

Hongchang Ding, Z. L. X. G. M. L., 2019. The influence of blade outlet angle on the performance of centrifugal pump with high specific speed,. *Vacuum,,* 159(0042-207X), pp. 239-246.

Jasen, W., 1983. *Computer Graphics Theory and Applications.* 1 ed. Berlin: Springer.

KSB, 2020. *Etanorm-R.* [Online]
Available at: https://shop.ksb.com/esales/ksb/b2b/start.do?xsrfid=SlOE6rWGCLyU43NuK-TMmGmCdtYgA7s0PUU&browsername=mozilla%2F5.0%2520%2528windows%2520nt%252010.0%253B%2520win64%253B%2520x64%2529%2520applewebkit%2F537.36%2520%2528khtml%252C%2520like%2520gecko%2529%2520ch

Patel, D., 2021. *Advanced Design Technology.* [Online]
Available at: https://blog.adtechnology.com/pump-blade-design-optimization
[Accessed 04 April 2021].

White, F. M., 2016. *Fluid Dymamics.* 8 ed. New York: Mc Graw Hill.

Wu, C.-H., 1952. *A General Theory of Three-Dimensional Flow in Subsonic and Supersonic Turbomachines of Axial-, Radial-, and Mixed-Flow Types,* Clevland, Ohio: National Advisory Committee for Aeronautics.