2nd European supercritical CO2 Conference
August 30-31, 2018, Essen, Germany

2018-sCO2.eu-110

CONCEPT AND PRELIMINARY DESIGN OF A 600 °C+ SCO_2 TEST FACILITY

Gampe, Uwe*
TU Dresden
Dresden, Germany
Email: uwe.gampe@tu-dresden.de

Henoch, Jasmin
TU Dresden
Dresden, Germany

Rath, Sebastian
TU Dresden
Dresden, Germany

Gerbeth, Gunter
Helmholtz Zentrum
Dresden-Rossendorf
Dresden, Germany

Hampel, Uwe
Helmholtz Zentrum
Dresden-Rossendorf
Dresden, Germany

Hannemann, Frank
Siemens AG, Power & Gas
Division Erlangen/Mülheim,
Germany

Glos, Stefan
Siemens AG, Power & Gas
Division Erlangen/Mülheim,
Germany

ABSTRACT
Supercritical carbon dioxide as working fluid in thermal power generation involves numerous new challenges. However, basic design features of the power plant architecture remain nearly unaffected. Consequently, technology development can be based on existing design roots and calculation methods, which need to be adapted and developed in any event. This requires an experimental basis allowing both generic experiments and testing of individual modules or complete system components.
A consortium of industrial and scientific partners has started technology development targeting application in bottoming cycles behind gas turbines, industrial waste heat recovery and Concentrated Solar Power (CSP). This requires that design and evaluation methods are constantly undergoing further development and improvement. A test facility is being prepared to contribute to methodology development on the experimental side and to contribute in basic research.
The test facility is designed in a modular approach. Maximum design pressure will be 300 bar and maximum mass flow rate is intended to range between 3 and 4 kg/s. This enables boundary conditions for testing of modules and complete components, such as heat exchanger and turbo machinery. Moreover, a modular architecture of the test facility will also allow experimental investigations in the test section at smaller mass flow rates.
We present the overall concept and the architecture of the test facility. Special attention is devoted to flow scheme, instrumentation, modular heater, recirculation blower and cooler for controlled cooling conditions. We present technical solutions, concepts and design data.

INTRODUCTION
It is well known that supercritical carbon dioxide (sCO_2) offers a range of advantages compared to current technologies applied in thermal power generation. Higher thermal efficiency represents increased utilization of primary energy. This causes reduced emissions at exploitation of heat sources based on thermochemical energy conversion and reduced heat release to the atmosphere with resulting lower ecological foot print. Moreover, smaller size of components with lower costs and higher operational flexibility are further advantages. Finally, lower water consumption in the power generation process is an important benefit.

An additional advantage of sCO_2 as working fluid for secondary heat sources is the lack of vaporization plateau in comparison to subcritical water-steam-cycles. Figure 1 shows schematically two temperature heat load diagrams with the same flue gas temperature for a water/steam and a sCO_2 cycle. The hatched area indicates the loss due to temperature differences. Due to the vaporization plateau of the subcritical water/steam cycle, this area is visibly larger than for the sCO_2 cycle, where a better thermal coupling inside the steam generator can be achieved. This shows that sCO_2 can lead to higher efficiency and therefore to an improved heat utilization. Even better results can be accomplished by the utilization of cascaded sCO_2 cycles for heat recovery.

DOI: 10.17185/duepublico/46084

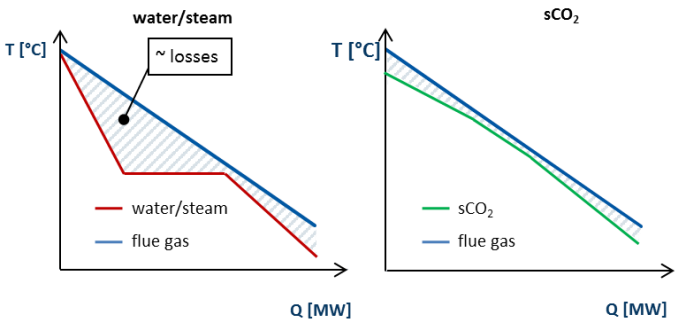

Figure 1: Comparison of water/steam and sCO_2 cycle for a defined secondary heat source and indication of occurring losses

Figure 2 shows the exergetic efficiency η_{ex} of a heat recovery steam generator (HSRG) for three different cycles as a function of the live steam temperature in the range of 400°C to 600°C.

$$\eta_{Ex} = \frac{\dot{E}_{working\ fluid}}{\dot{E}_{flue\ gas}} \qquad 1\text{-}1$$

The black line indicates the supercritical CO_2 cycle, the red line a triple-pressure steam cycle and the blue line a dual-pressure steam cycle. Generic cycle calculations based on simplified cycle models were performed. Minimal pinch point and neglected pressure losses were set as boundary conditions [1].

It is well known, that higher live steam temperatures lead to a higher exergetic efficiency and triple-pressure steam cycle is more efficient than dual-pressure steam cycle, as shown in Figure 2. The advantage of the exergetic efficiency of the sCO_2 cycle compared to the triple-pressure steam cycle gets smaller with higher temperatures. The diagram also shows, that for lower temperatures (400°C) the benefit of the sCO_2 cycle is more distinct.

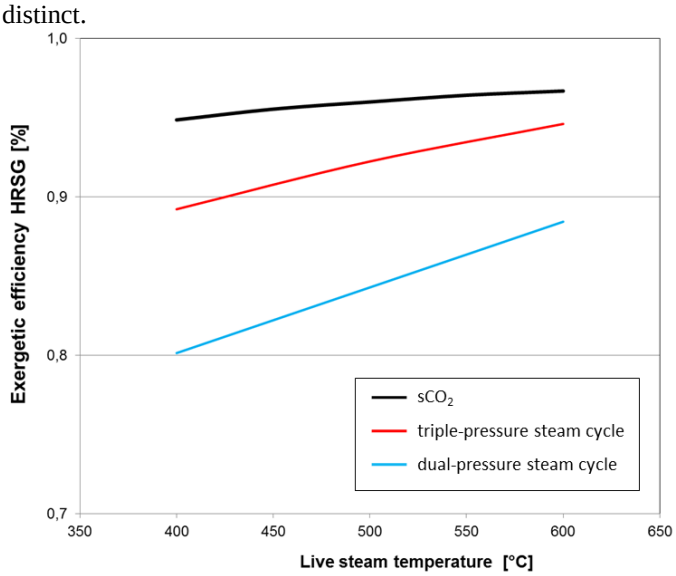

Figure 2: Exergetic efficiency of a heat recovery steam generator (HSRG)

Comparative analysis has also been conducted for application of sCO_2 for primary heat sources, e.g. concentrated solar power (CSP). In contrast to state-of-the-art fossil power plants with supercritical steam parameters, which are not in the focus of the authors, solar thermal power plants are based on subcritical steam cycles.

Figure 3 shows the temperature entropy diagram of a latest state of technology 150 MW molten salt tower power plant with water/steam cycle. The Carnot efficiency is calculated with the average temperatures of the heat sink and the heat source.

$$\eta_{Carnot} = 1 - \frac{T_{m,heat\ sink}}{T_{m,heat\ source}} \qquad 1\text{-}2$$

Maximum cycle temperature is 550°C. The Carnot efficiency of this cycle with reheat is 51%.

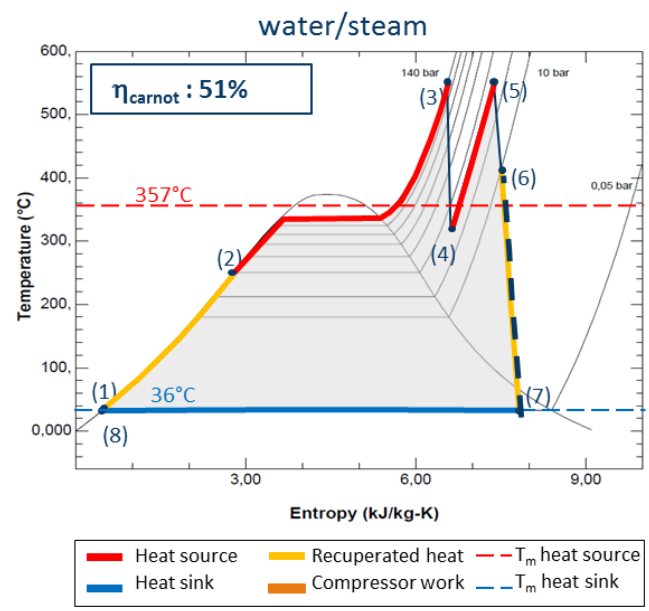

Figure 3: 150MW CSP, molten salt solar tower plant with water/steam

Figure 4 shows the temperature entropy diagram for the cycle with sCO_2 as working fluid and therefore higher pressure levels, but the maximum cycle temperature is also 550°C. Application of sCO_2 as working fluid leads to a higher average temperature of the heat source and resulting higher Carnot efficiency of 56%.

These basic comparisons illustrate already the potential of supercritical carbon dioxide for the target applications addressed by the authors. The research project CARBOSOLA (supercritical carbon dioxide as alternative working fluid for bottoming cycle and thermal application) has been initiated to conduct technology development for these target applications.

DOI: 10.17185/duepublico/46084

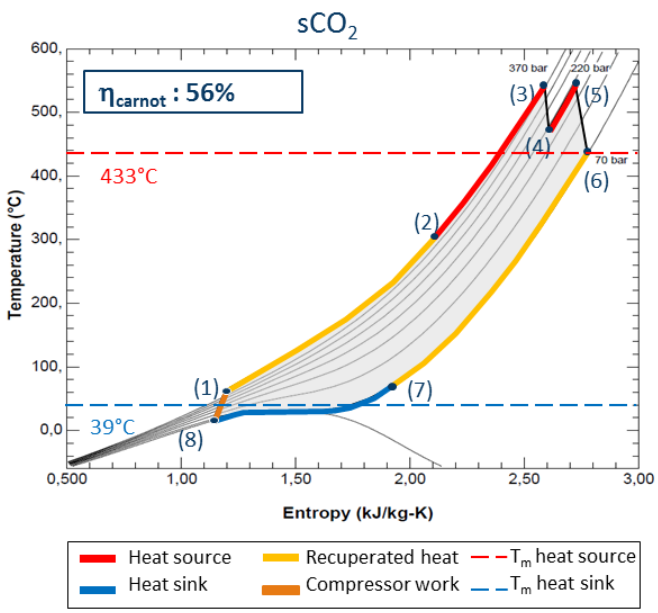

Figure 4: 150MW CSP, molten salt solar tower plant with sCO_2 as working fluid

The CARBOSOLA project comprises a consortium of industrial and scientific partners. Especially bottoming cycles behind gas turbines as well as gas and diesel engines with maximum temperatures between 350°C and 600°C for power generation and mechanical drive are in the focus of interest. Furthermore power generation based on waste heat of industrial processes will be considered. Primary heat sources will only be addressed for CSP and temperature range of 600°C to 700°C. The engineering and installation of a sCO2 test loop is part of the project.

TEST LOOP DEFINITION AND BASIC ARCHITECTURE

The sCO_2 test loop serves to contribute both to technology development by testing of singular modules or components and to basic research by generic experiments. Experiments regarding fluid mechanics, heat transfer, material behavior and damage mechanisms as a result of thermochemical and thermomechanical processes provide relevant information for development and advancement of design and evaluation methods. The sCO_2 loop will also be used for the development and testing of measurement technologies for sCO_2 cycles.

Based on the preliminary work, temperatures up to 600°C at a pressure level up to 300 bar have been specified as design parameters of the planned testing facility. The intended site for the sCO_2 test loop is on the premises of the Helmholtz-Zentrum Dresden-Rossendorf (HZDR). Existing infrastructure can be used. A power supply of maximum 3 MW can be utilized for an electrical heater and an existing heat removal system using a water-glycol mixture as heat transfer media provides a heat sink.

Basic flow scheme of the envisaged test loop is presented in Figure 6. The sCO_2 test loop concept is based on a modular approach in three expansion stages. The basic concept consists of a supply unit, recirculation blower, modular heater, component test section and a main cooler with a bypass. Later expansion stages, marked with a blue filling, will provide recuperator (stage 2) and turbine testing (stage 3) as well as the therefore necessary compressor and optional additional cooler. That allows to test different components in a complete cycle. The operating range of the final expansion stage is marked with a green area in the temperature entropy diagram presented in Figure 5.

Core of the first expansion stage is the horizontal component test section where certain flow conditions for experiments can be realized. Based on the 2.5 MW power input of the heater, a maximum mass flow of 3.5 kg/s for 600°C can be achieved. Of course, partial mass flow in the testing section will be possible.

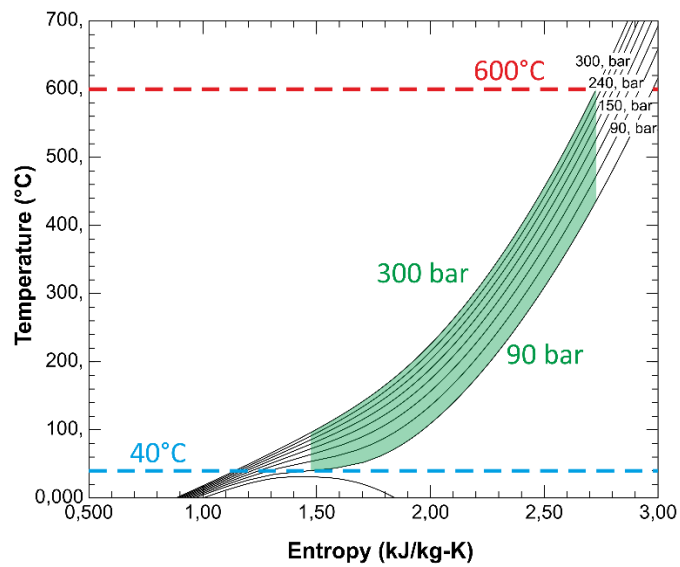

Figure 5: Operating range of the sCO_2 test loop in the final expansion stage

DOI: 10.17185/duepublico/46084

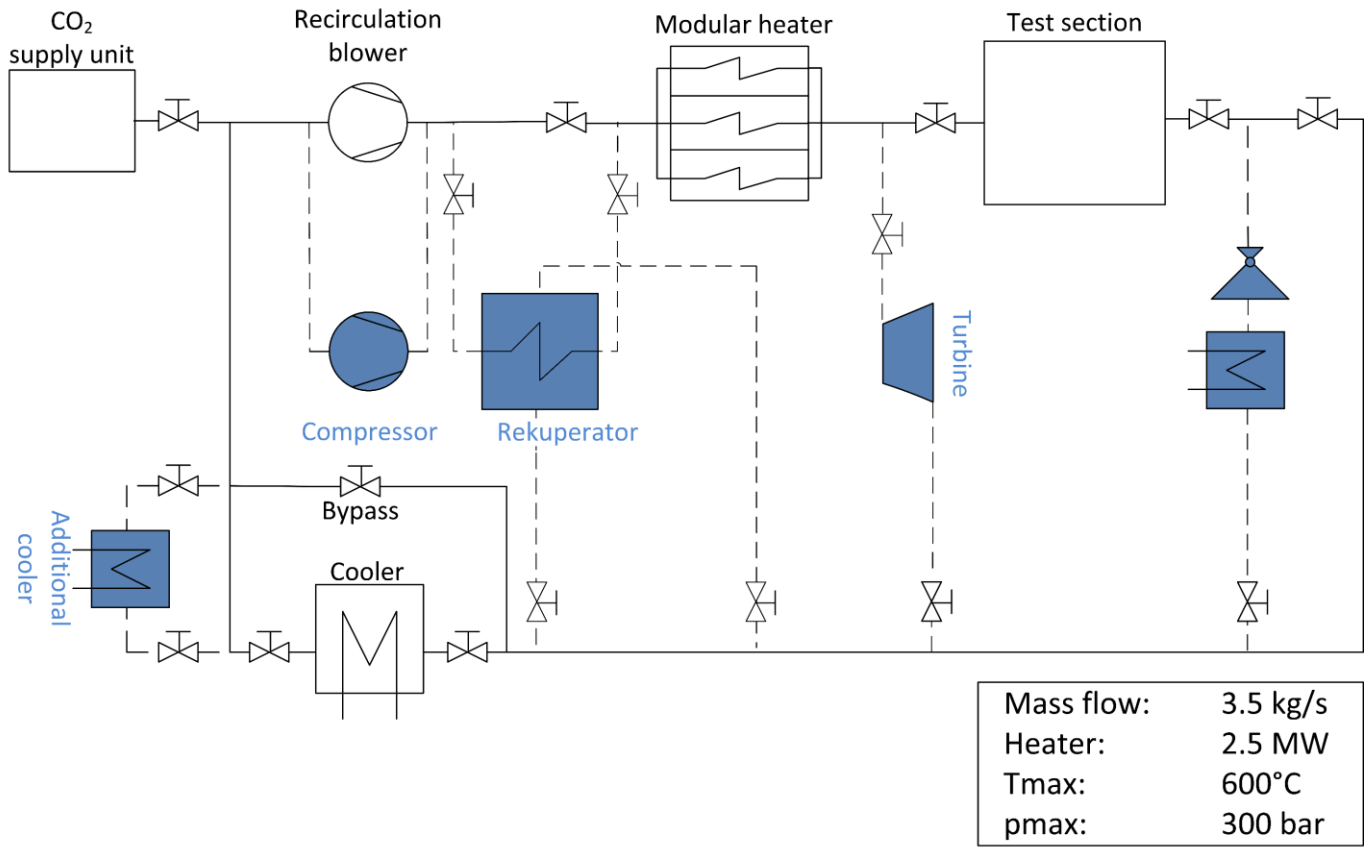

Figure 6: Basic test loop scheme (final expansion stages marked blue)

TEST LOOP DESIGN ASPECTS

In the current phase of preliminary design some substantial considerations were addressed containing the pre-sizing of interconnecting pipes and the basic instrumentation of the loop. Moreover, conceptual work on the first components namely the heater, the cooling system and the recirculation blower was done.

Piping and basic instrumentation

To determine a suitable size for the interconnecting pipes a comparative study on different nominal diameters (DN) was carried out. As a first guide value a maximum flow velocity of about 30 m/s (100 ft/s) was specified, which has been stated by Moore et al. [2] to be a good compromise between pipe size and pressure losses. In some cases, multiple pipe setups were considered to reduce the velocity splitting up the mass flow.

The minimum thickness of the pipes is calculated based on AD 2000 standard [3]. Related to a foregoing examination of suitable materials 347HFG stainless steel was chosen as a potential alternative to more expensive nickel alloys.

The results depicted in Table 1 show that especially the use of smaller diameters leads to solutions with inacceptable high pressure losses despite compliance with the set reference for flow velocity. Given that only single pipe configurations were chosen, the velocity criteria worked well for the low-pressure specification (p=90 bar) resulting in a specific loss of about 0.06 bar/m at DN 60. Regarding the selection of material all of the variants could be realized using preferred standard sizes according to DIN EN 10220 which confirms 347HFG stainless steel as an alternative to nickel alloys. For further investigations DN 60 was chosen as the preferred diameter equally for both of the pressure levels also in order to minimize the variety of accessory parts.

Table 1: Comparative Study of Pipe Specifications

	DN32			**DN40**		**DN60**		**DN80**	
	Dimensioning (T=600°C, p=300 bar), Material: 347HFG (1.4908)								
d_a [mm]	48.3			60.3		88.9		114.3	
s_b [mm]	8.8			11		16		20	
d_i [mm]	30.7			38.3		56.9		74.3	
	Pressure losses (**HP**: T=600°C, p=300 bar; **LP**: T=600°C, p=90 bar, Roughness = 0.04 mm)								
	HP	HP	LP	HP	LP	HP	LP	HP	LP
parallel pipes	1	2	3	1	2	1	1	1	1
v_{res} [m/s]	27.70	13.85	29.36	17.80	28.30	8.24	26.19	4.73	15.04
Δp [kPa/m]	44.85	11.25	15.93	14.07	11.23	1.88	5.97	0.44	1.41

DOI: 10.17185/duepublico/46084

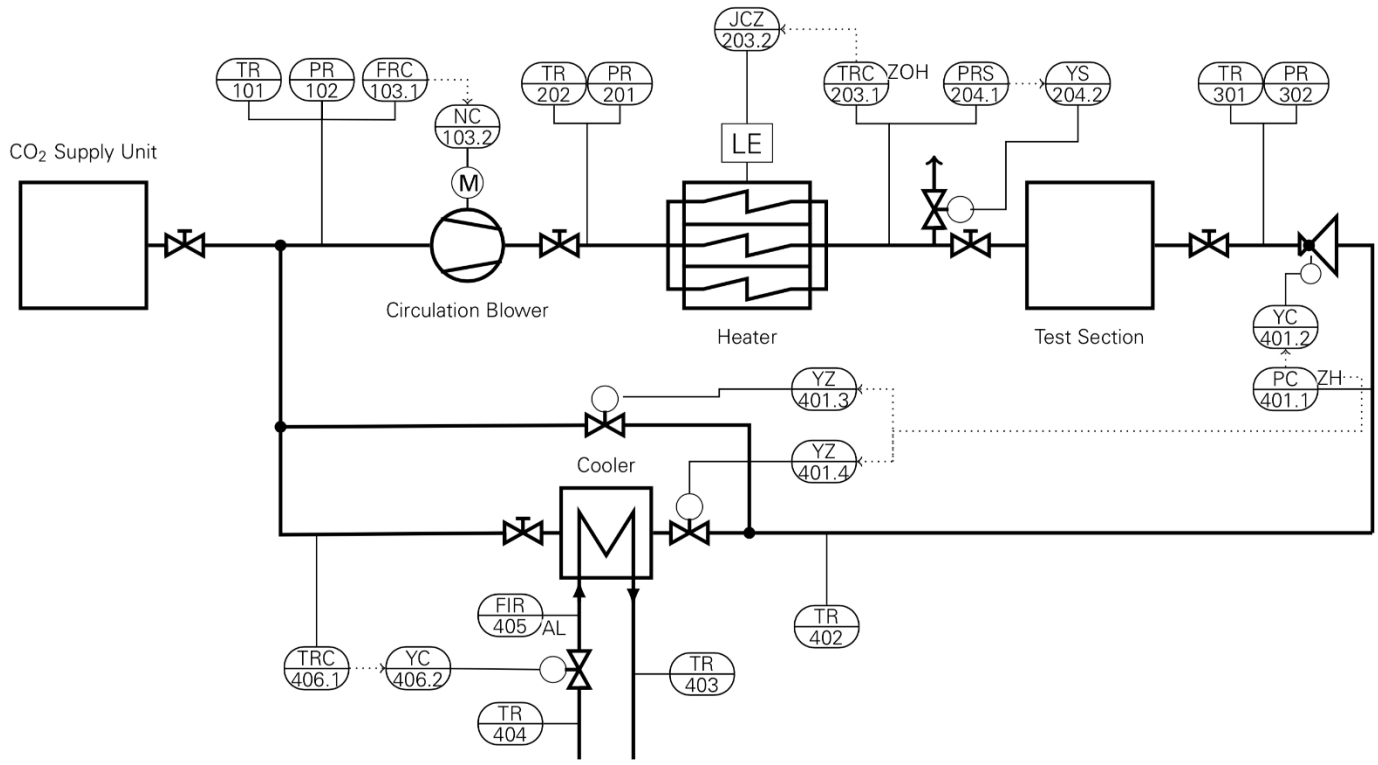

Figure 7: Basic instrumentation of the sCO2 test loop

As presented in Figure 7 the basic instrumentation should contain pressure and temperature sensors on every relevant point of state. The mass flow will be captured at the inlet of the recirculation blower. The monitoring for the whole loop is planned to take place from a central control room.

Modular heater

Fluid heating in similar test facilities is usually done by electric circulation heaters [4], waste heat boilers [5] [6] or indirect heating solutions [5] in different sizes and configurations which are mostly selected on the available energy sources or beneficial operating characteristics. Regarding the available infrastructure and power capacities on site the fluid heating for the present loop was decided to be based on electrical heating. To get a maximum of flexibility with respect to both the experimental parameters and future extensions a modular configuration was chosen. Like depicted in Figure 8 heating is assumed to take place in two stages, a main and a post heater in which the latter should provide a continuously variable heating power upon 250 kW. Furthermore, each stage should consist of several sections which enables the handling of lower mass flow rates. By connecting or disconnecting several of them a partial load behavior is enabled without changing the operational characteristics due to a change in the inner heat transfer coefficient.

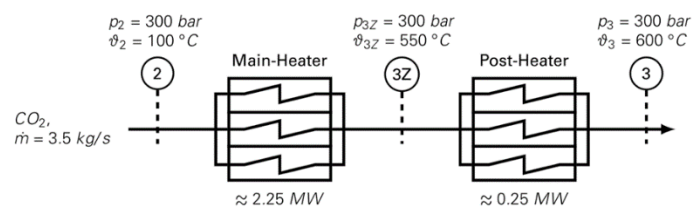

Figure 8: Modular heater concept

Since the aforementioned circulation heaters potentially resulting in high space requirements, as seen at the SANDIA rig [4], an own design approach has been developed to be compared later with a commercial circulation heater solution. In contrast to the latter where a set of heating rods immersing into the fluid at the alternative concept the tubing itself should generate the heat. Presented in Figure 9 this is expected to be done by splitting up the CO_2 to several small pipes which are operating as joule heating elements warming up the fluid flowing through.

A similar concept is already in use at another local test rig for the generation of saturated steam.

DOI: 10.17185/duepublico/46084

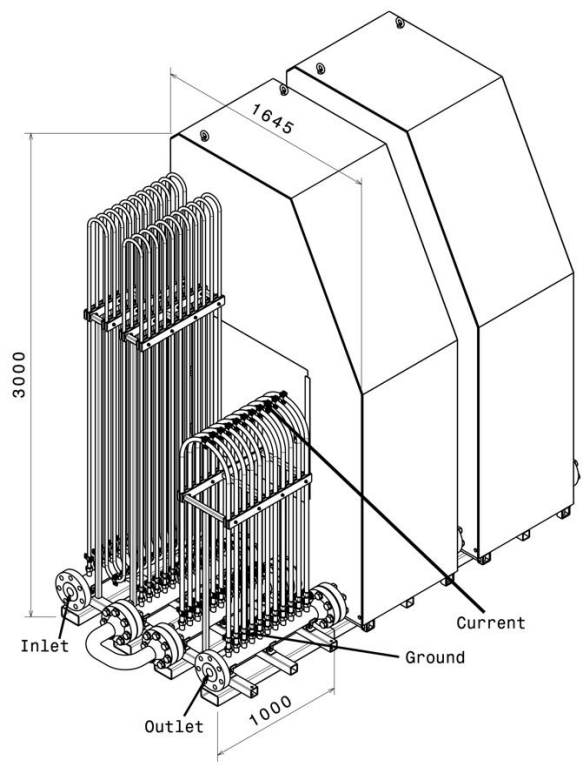

Figure 9: Heater design with 347HFG stainless steel

The limiting factor determining the size of the heating tubes is the maximum allowable wall temperature defined by strength limitations of the material. So, additional work was done comparing the created solution based on 347HFG stainless steel (Figure 9) with a second variant using IN 740H as tube material. With the latter the number of heater modules could be reduced from 3 to 2 containing the same number of pipes. Moreover, the resulting height decreases of about 50% regarding to the same base construction for both of the variants. Based hereon in ongoing work next steps will be addressed containing a fluid dynamical investigation plus the technical feasibility of the key components like the tube fittings and the electrical contacts.

Cooler

To serve existing test facilities a building near to the installation site is fitted with a powerful heat removal system using a water-glycol mixture as heat transfer media. Collected heat is dissipated by a roof mounted heat exchanger system to the ambient air with a 10 K temperature difference with reference to the ambient temperature. Circulation is done by an unregulated pump with a maximum mass flow rate of 51 kg/s splitting up to all simultaneous used fluid branches. Integration of new systems can be done by using existing pipe connections with a nominal diameter of DN 65 each. Regarding to the planned rig they are easily accessible from the expected location of erection through the buildings outer wall.

Thus, the choice of a suitable heat exchanger configuration was done against the background of integrating it in the existing system. Taking into account the fact that some of the rigs already attached to the system using carbon steel for their exchangers the priority was a reliable solution resistant to plugging and damages induced by oxide particles within the cooling media.

Given that the cooler is not object of the primary investigations neither a ``form follows function'' approach was chosen selecting the shell and tube architecture.

As presented in Figure 10 the final design resulted in a stack of three modules of two hairpin heat exchangers each. Regarding to the ambient dependency of the heat removal system the hairpin type design ensures a strict counter flow. By this means it is possible to get an optimal use of the remaining temperature difference between the primary outlet and the cooling media inlet temperature. The distribution in three modules was chosen equivalent to the heater concept giving the same modularity and moreover resulting in a construction using a variety of standardized components like pipe sections for the shell.

For calculation a cooling fluid inlet temperature of $T_{sec,in}$= 30°C has been used which has been stated as the most common inlet temperature during power operation of a similar test rig with 4 MW heater power. However, to make the cooling capacity less dependent from the ambient an additional cooling module is considered for later stages which adjusts the cooling water to a suitable inlet temperature before entering the cooler giving all time stable test conditions.

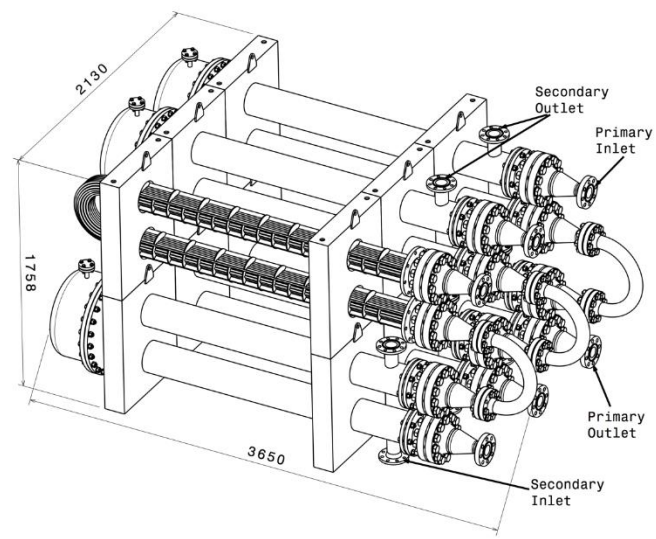

Figure 10: Cooler design

Recirculation blower

To cover all occurring pressure losses in the sCO_2 test loop, a recirculation blower is planned. A compressor to allow full cycle experiments will be part of the second expansion stage. The recirculation blower is supposed to cover a projected pressure drop of 15 bar, which leads to a pressure ratio of 1.05. The pressure drop is composed of estimated values for the heater, testing section and piping of the test loop. Due to the high temperatures (600°C), high pressure level (285 bar) at the

DOI: 10.17185/duepublico/46084

operating point and variable operating conditions, a custom designed centrifugal compressor is currently investigated. First preliminary design calculation show an outer impeller diameter of approximately 80 mm with a rotational speed of 30000 min^{-1} as shown in Figure 11 [7]. The electrical power requirement for the circulation blower are estimated to be 40 kW for a mass flow of 3.5 kg/s. The predesign and a numerical analysis will be presented at the conference.

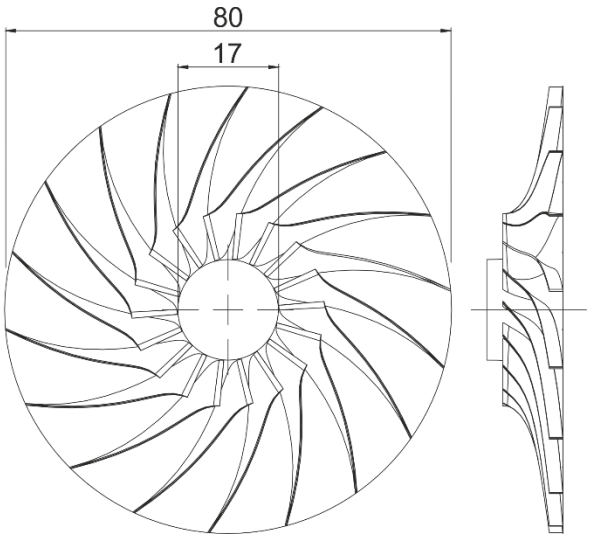

$$\pi = 1.05 \quad n = 30000\ min^{-1} \quad \dot{m}_{CO2} = 3.5\ kg/s$$

Figure 11: Recirculation blower predesign

SUMMARY AND TIME MANAGEMENT UNTIL COMMISSIONING

The aim of the sCO_2 test loop concept is to provide an experimental basis to test developed system components or singular modules as well as to conduct generic experiments. A motivation for the selection of the intended parameter range of maximum temperature of 600°C is presented. The test loop is planned at the site of the HZDR with a modular approach and three expansion stages. Some predesign aspects of selected components of the first expansion stage are discussed. With the start of the 3 year CARBOSOLA project the detailed engineering of the test loop components will be commenced. The erection of the test loop as well as the commissioning with the verification of the parameters is planned until the completion of the project.

NOMENCLATURE

CO_2	Carbon dioxide
CSP	Concentrated solar power
DN	Nominal diameter
d_a	Outer diameter
d_i	Inner diameter
$\dot{E}$	Exergetic flow
HP	High pressure pipe location
HSRG	Heat recovery steam generator
HZDR	Helmholtz-Zentrum Dresden-Rossendorf
LP	Low pressure pipe location
$\dot{m}$	Mass flow
n	Rotational speed
p	Pressure (bar, kPa)
Q	Heat (MW)
s	Wall thickness
sCO_2	Supercritical carbon dioxide
T	Temperature (°C, K)
v	Velocity (m/s)
η_{Carnot}	Carnot efficiency
η_{ex}	Exergetic efficiency
π	Total pressure ratio
ϑ	Temperature (°C, K)

REFERENCES

[1] Glos, Stefan, et al. (2018) Evaluation of sCO2 Power Cycles for Direct and Waste Heat Applications, 2nd European supercritical CO2 Conference, August 30-31, 2018, Essen, Germany
[2] Moore, Jeffrey, et al. (2014) Development of a 1MW Supercritical CO2 Brayton Cycle Test Loop. The 4th International Symposium - Supercritical CO 2 Power Cycles September 9-10, 2014, Pittsburgh, Pennsylvania.
[3] AD 2000 Regelwerk (2016). Verband der TÜV e.V., Berlin
[4] Pasch, Jim, et al. (2012) Supercritical CO 2 Recompression Brayton Cycle: Completed Assembly Description. Sandia Report - SAND2012-9546.
[5] Cho, Junhyun, et al. (2017) Development of the Supercritical Carbon Dioxide Power Cycle Experimental Loop with a Turbo-Generator. Proceedings of ASME Turbo Expo 2017: Turbomachinery Technical Conference and Exposition - GT2017, June 26-30, 2017, Charlotte, NC, USA.
[6] Eduardo Anselmi, Pavlos Zachos, Robert Collins, Mark Hassan. (2016) Development of an experimental S-CO 2 loop for bottoming cycle applications. 1st European Seminar on Supercritical CO2 (sCO2) Power Systems, 29.-30. September 2016 - Vienna - Austria.
[7] CFturbo GmbH (2018), CFturbo (10.2.7.717), Dresden – Munich, Germany

DOI: 10.17185/duepublico/46084