Optimization of a Transonic Radial Compressor Stage using CFturbo®, ANSYS-CFX and optiSLang®

Dr.-Ing. Sebastian Stübing (CFDnetwork GmbH),

Dr.-Ing. Gero Kreuzfeld, Ralph-Peter Müller (CFturbo GmbH)

Contents

CFturbo® - Business Areas

CFturbo® Software & Engineering GmbH

CFturbo® Software

- Turbomachinery Design Software
- Automated Workflows

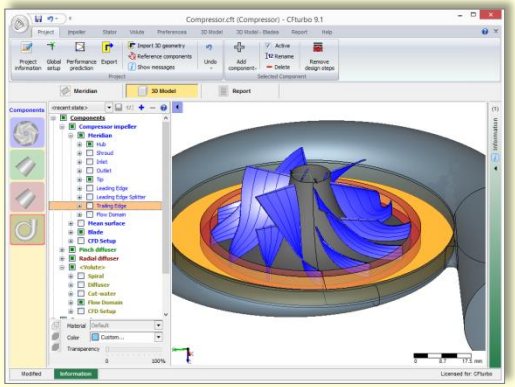

Engineering

- Turbomachinery Conceptual Design
- CFD/FEA Simulation
- Optimization

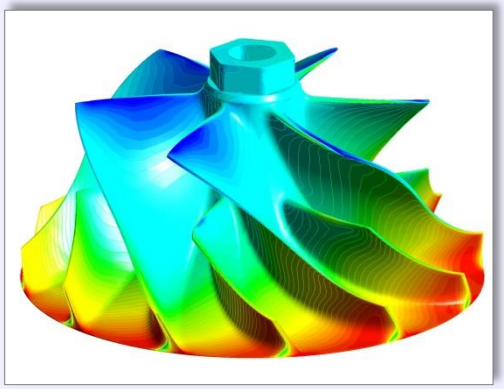

CAD & Prototyping

- 3D-CAD Modeling
- Prototyping
- Testing, Validation

CFturbo® – Software

- CFturbo® is a modern, powerful and user-friendly software tool for **Conceptual Turbomachinery Design**
- The software is on the market since 2005
- There are more than 120 clients globally
- CFturbo® modules to design
  - Pumps
  - Blowers
  - Compressors
  - Turbines
  - Stators and diffusers
  - Volutes
- Axial pumps, inducers, fans and turbines are available now in **CFturbo10.0**

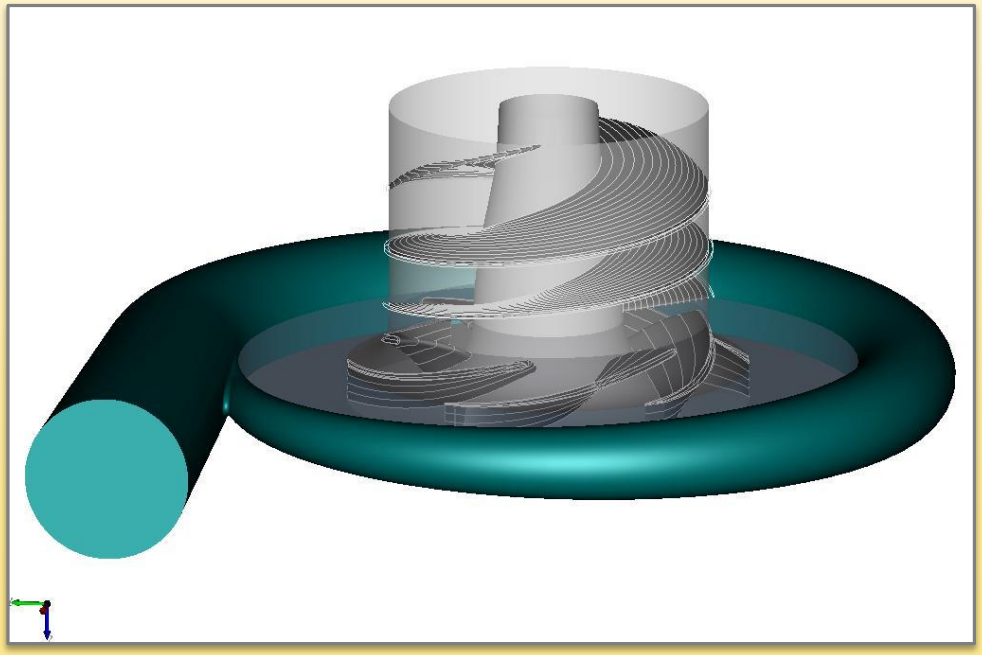

Conceptual Turbomachinery Design Software - CFturbo®

Define operating point
Q, Δp, speed, fluid properties;
Inlet conditions

Fundamental equations
Bernoulli, Euler equation,
Mass-, Momentum-, Energy-
conservation, …

Empirical correlations
Ability to independently
optimize parameters;
user can integrate own data

Reference geometry -
elements from **CFturbo**

CFturbo®

Existing geometry-
elements, **imported**

New or modified components

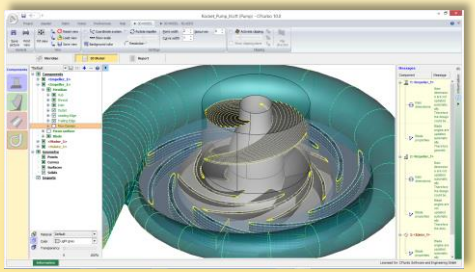

Typical development process for Turbomachinery components

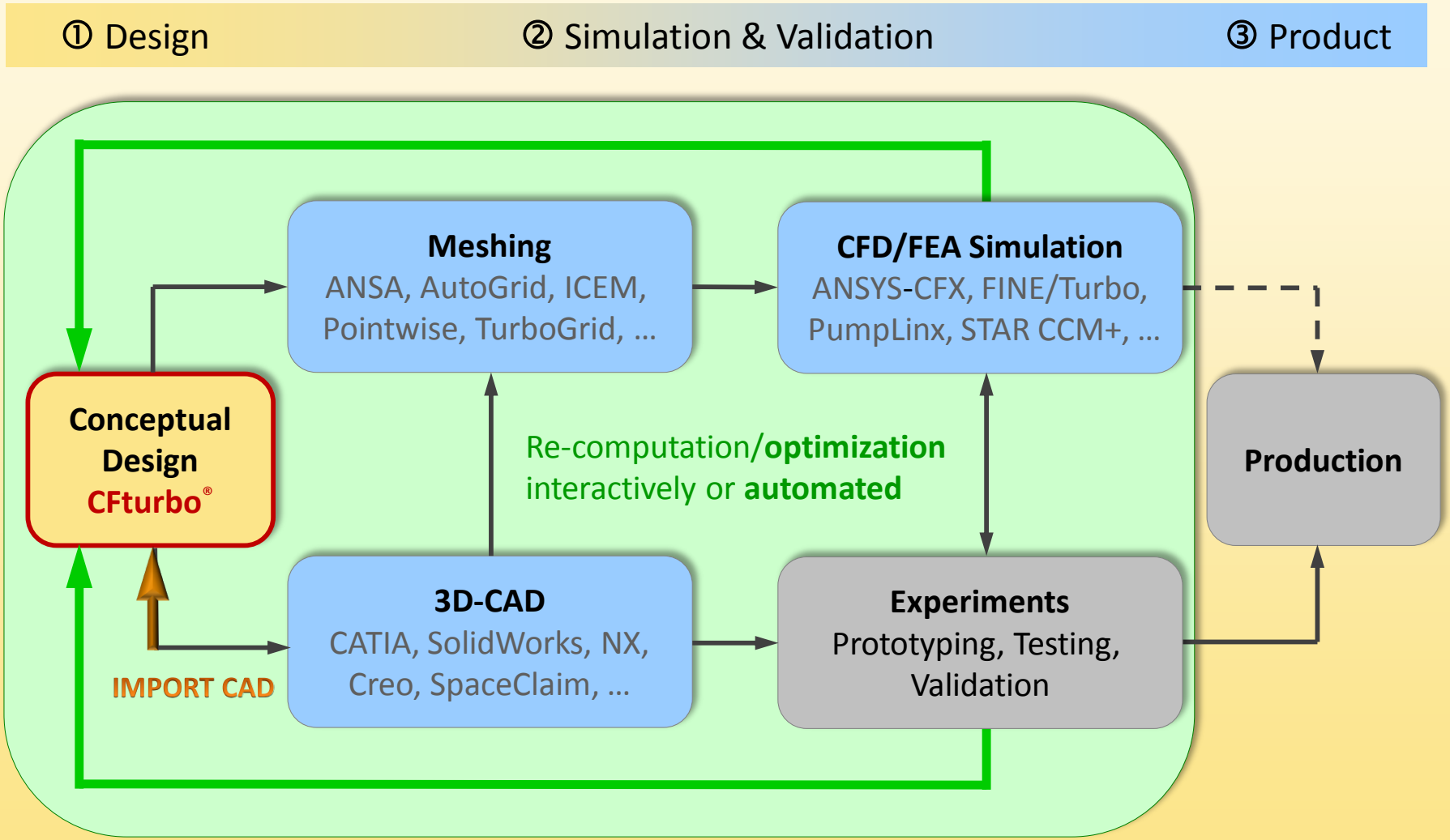

Initial Design with CFturbo®

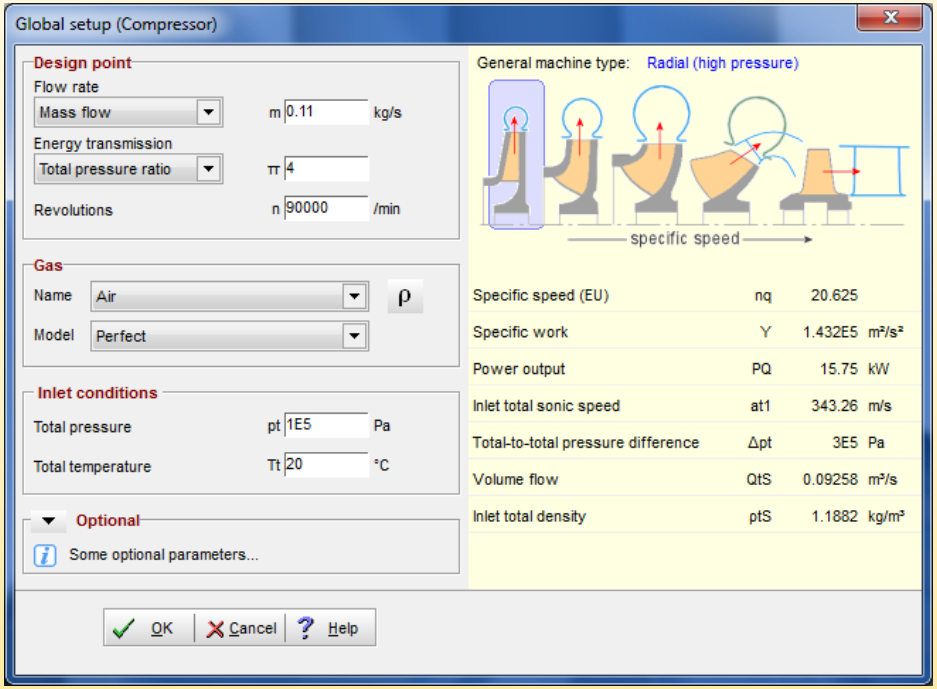

Empirical correlations are used for initial sizing (main dimensions)

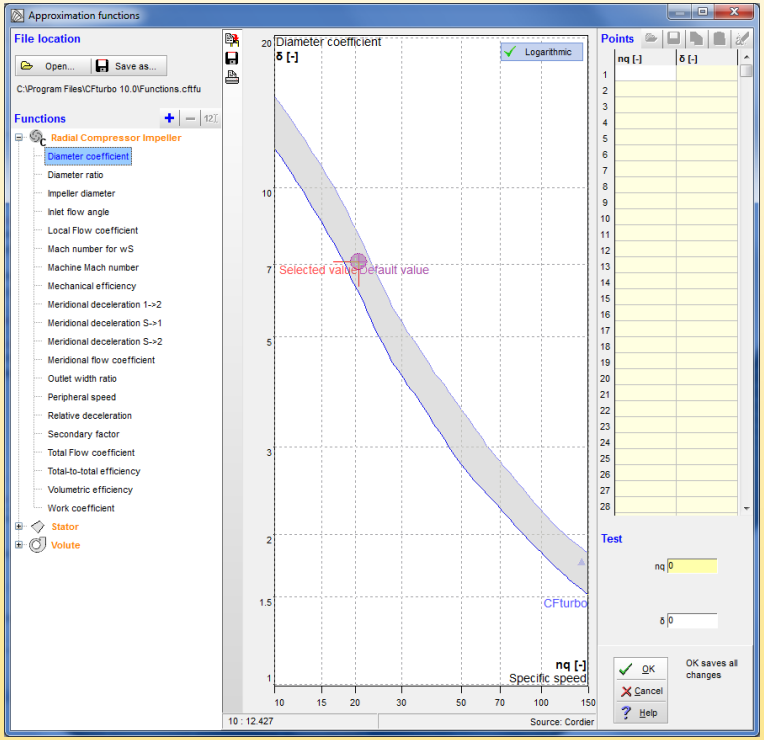

Define Design Point

- Mass Flow Rate: $m_{flow} = 0.11$ kg/s
- Total Pressure Ratio: $\Pi = 4$
- Machine Speed: $n = 90000\ min^{-1}$

Initial Design with CFturbo®

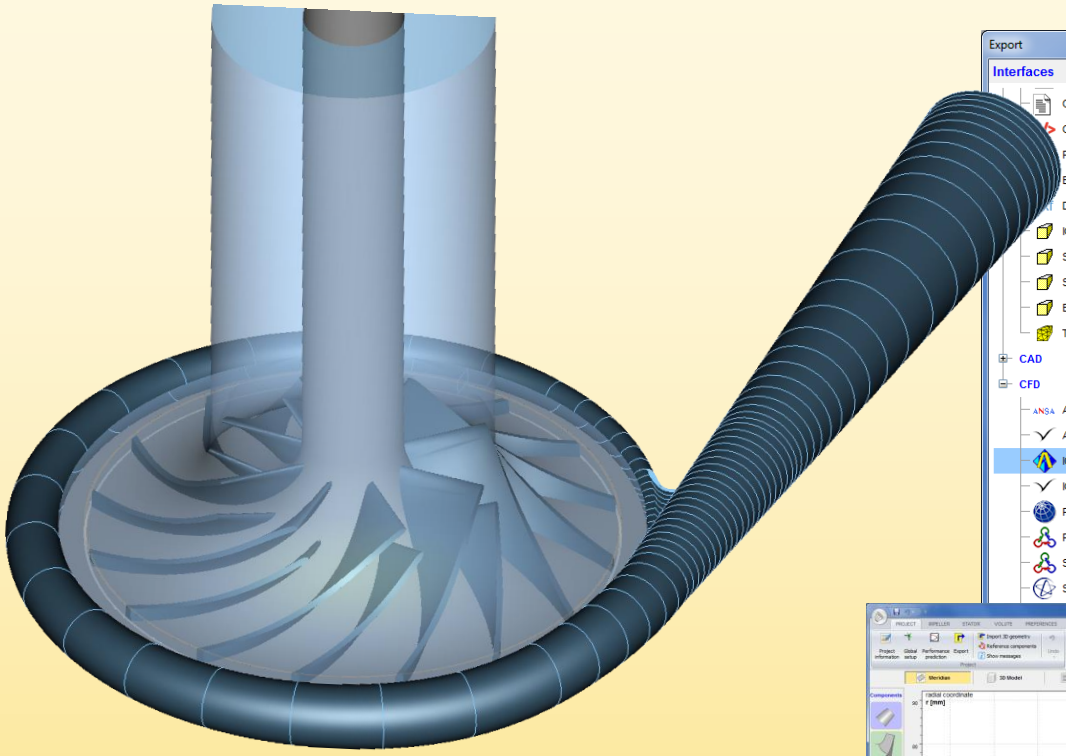

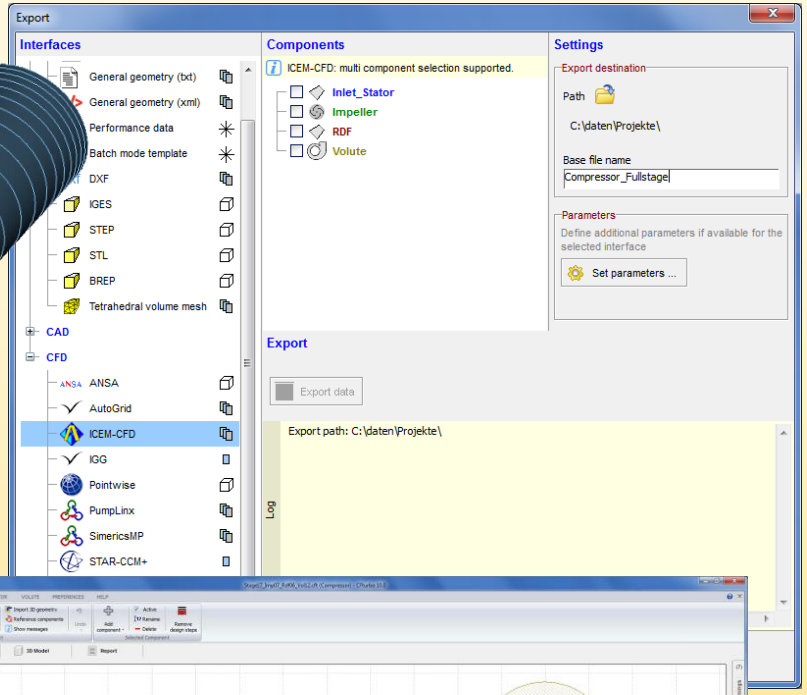

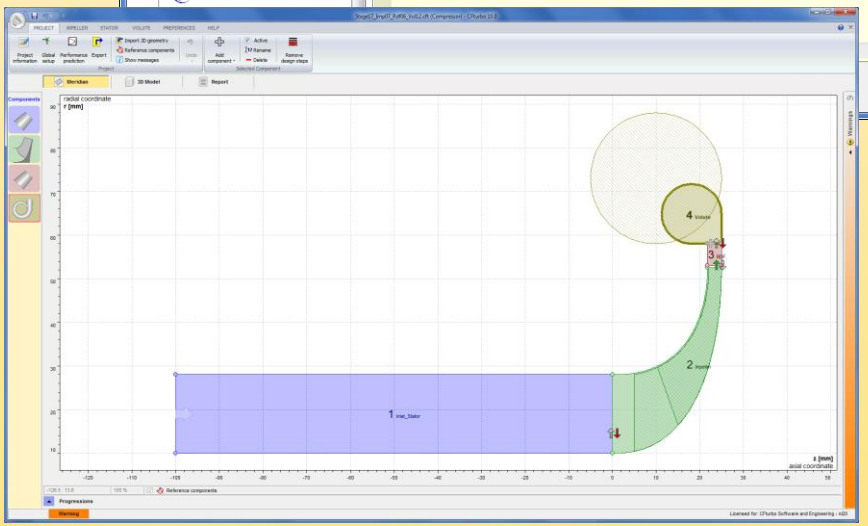

Export Geometry for Meshing

Write CFT-Batch-File

CFD Simulation – Meshing

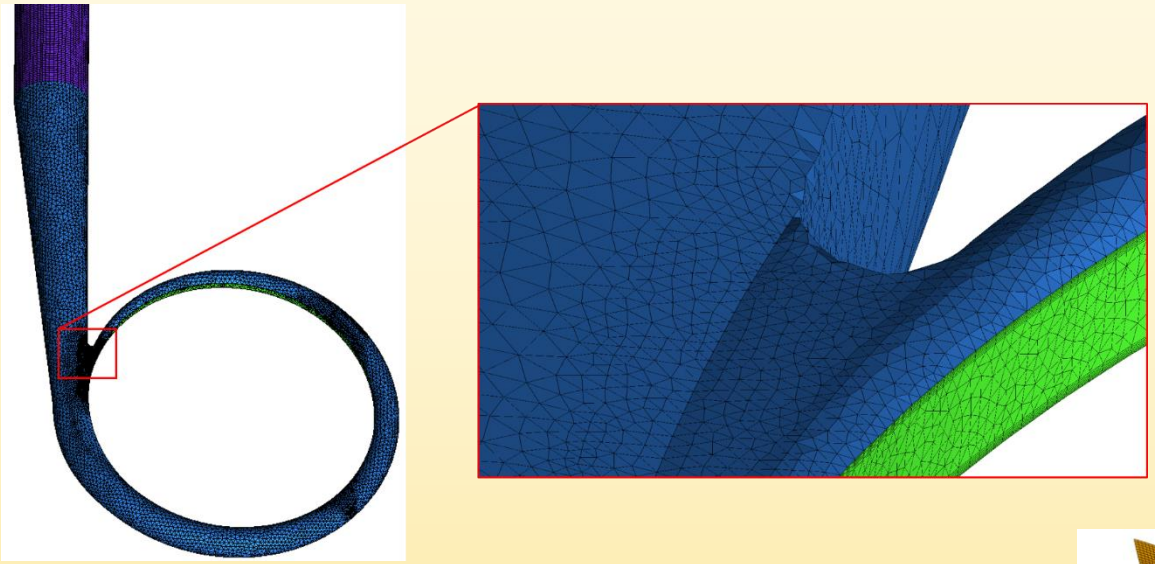

Volute

- Automatic ICEM-Meshing (CFturbo-Script)
- Tet/Prism Hybrid Mesh
- ~520k elements

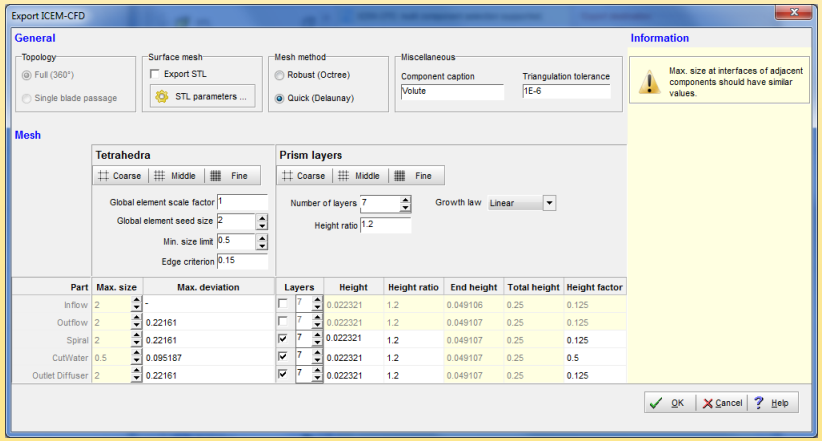

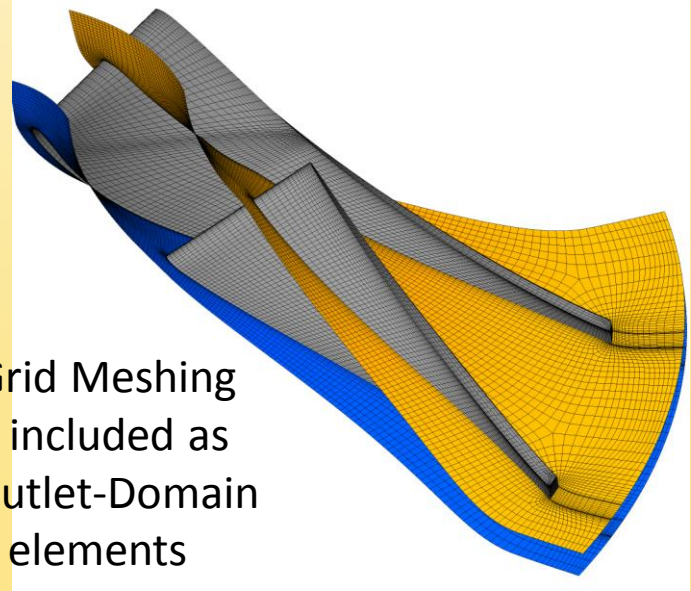

Impeller

- TurboGrid Meshing
- Stators included as Inlet/Outlet-Domain
- ~3 mio elements

CFD Simulation – Setup

Inlet

p_{tot} = 1bar

T_{in} = 20°C

Results

Total Pressure Ratio: $\Pi = \frac{p_{tot,IF4}}{p_{tot,RSI1}}$

Impeller Power: $P_i = M \cdot \omega$

Stage Efficiency: $\eta_{Stage} = \frac{h_{tot,isen,IF4} - h_{tot,isen,RSI1}}{h_{tot,IF4} - h_{tot,RSI1}}$

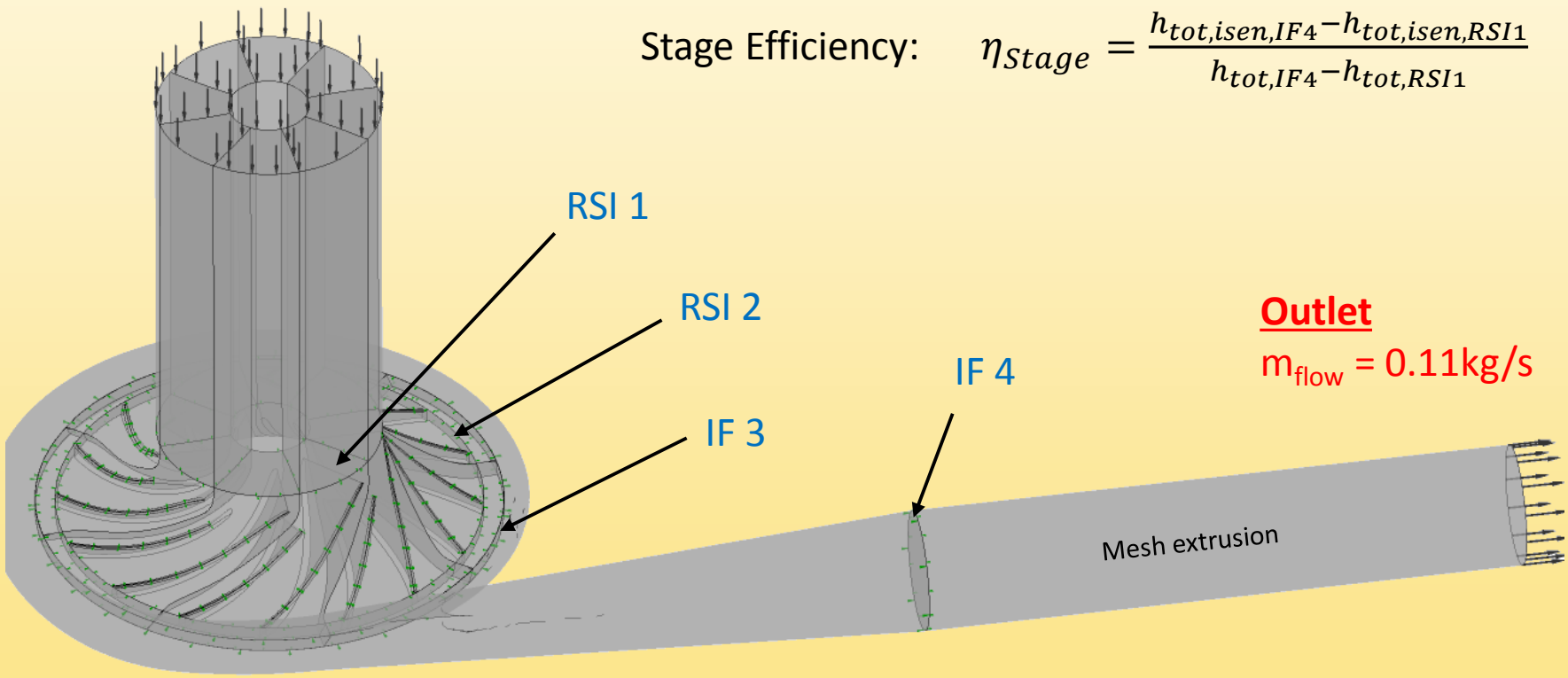

Outlet

m_{flow} = 0.11kg/s

Steady State, Frozen Rotor, Total Energy, Air (Ideal Gas)

CFD Simulation – Results

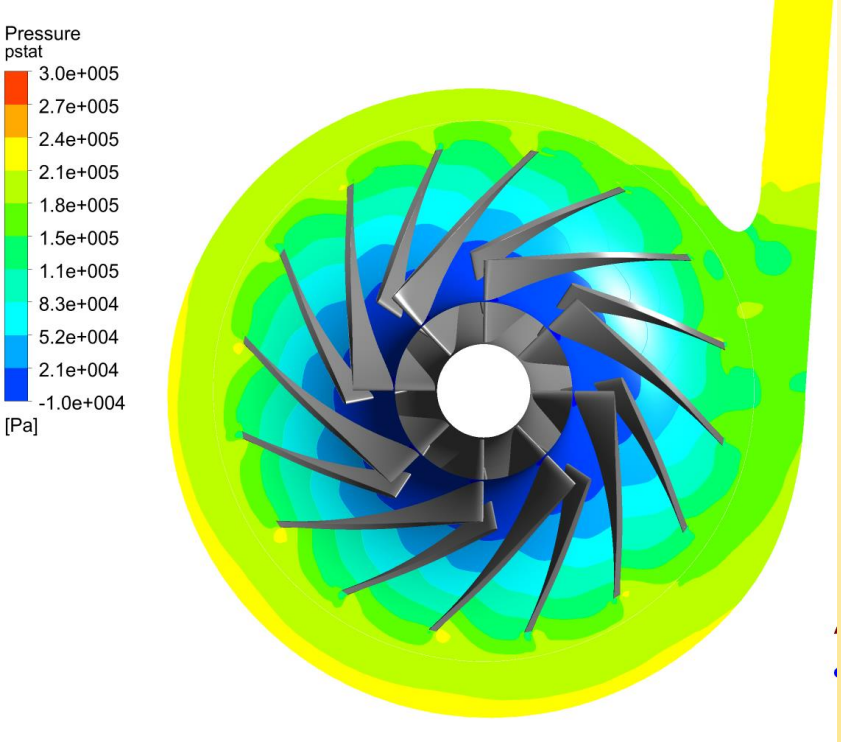

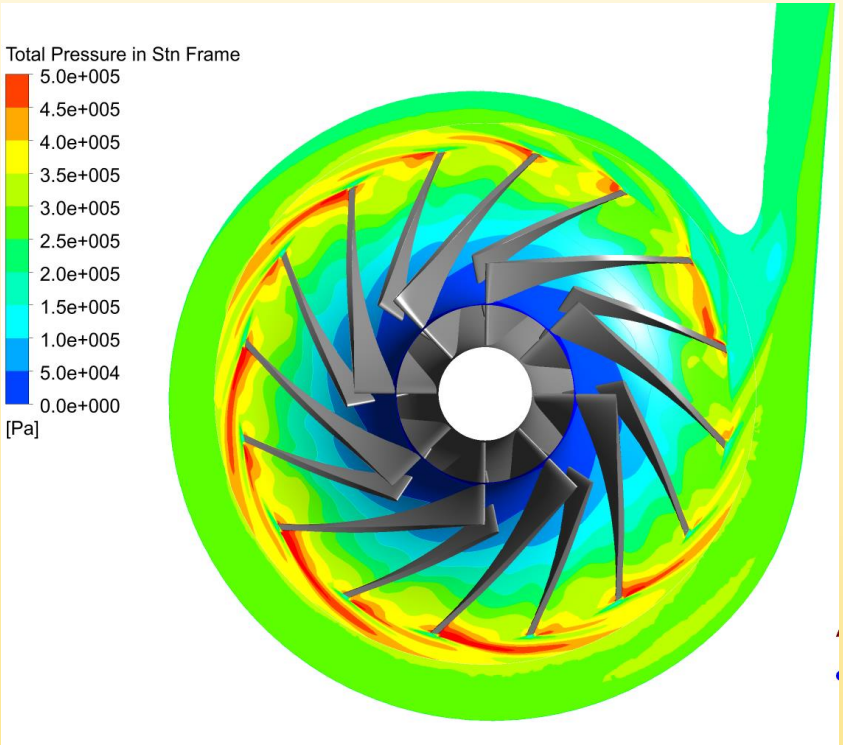

CFD Simulation – Results

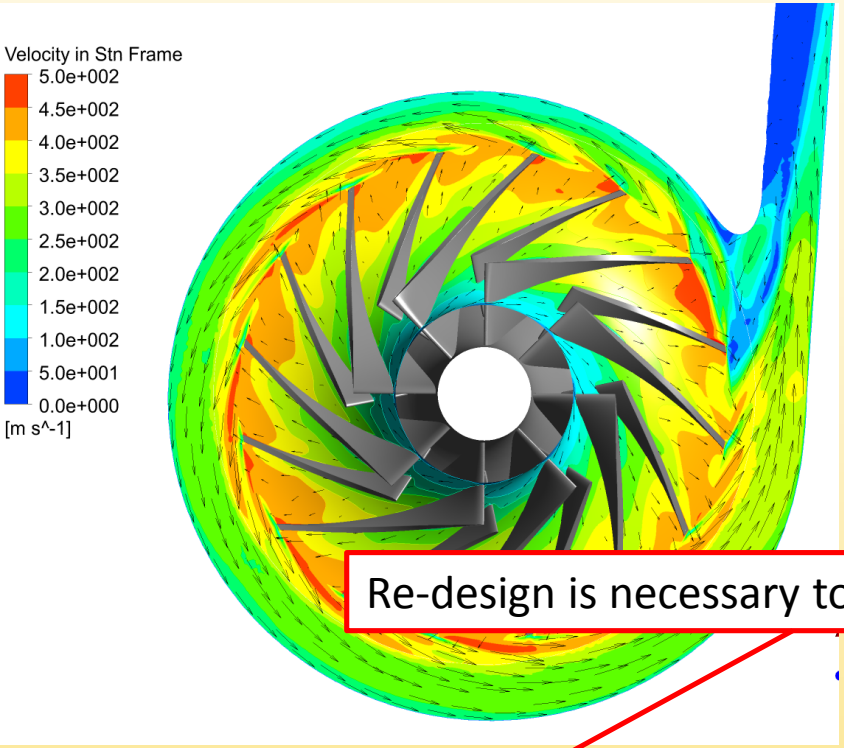

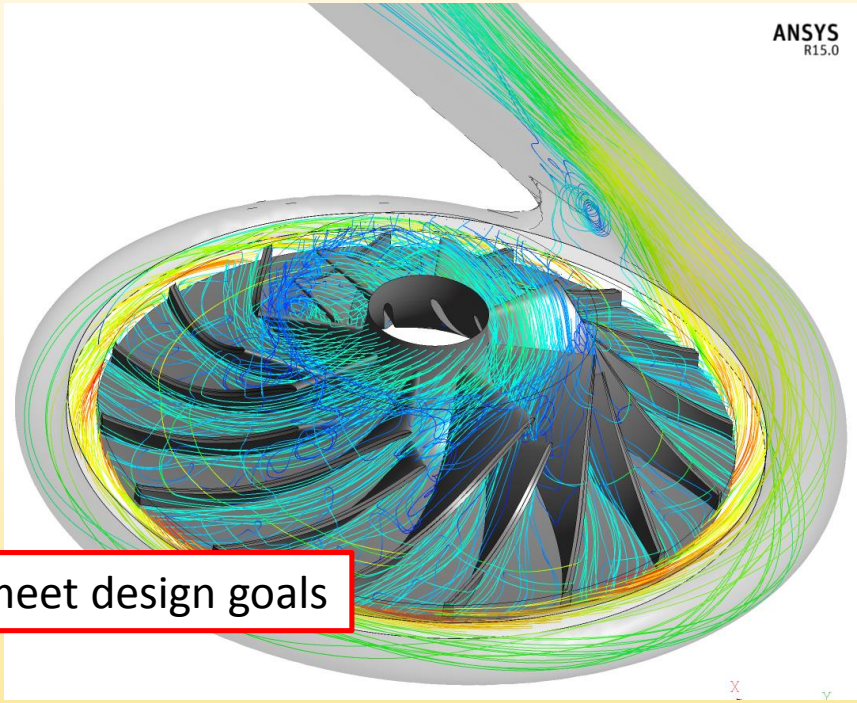

Re-design is necessary to meet design goals

Total Pressure Ratio Π	Power Consumption P_i	Stage Efficiency η_{Stage}	Impeller Efficiency η_{Imp}
3.8	24,260	0.61	0.81

Optimization

- ✓ CFturbo® is fully integrated into optiSLang® for comfortable handling
- ✓ optiSLang® is master instance and controls the workflow
- ✓ Workflow consists of:

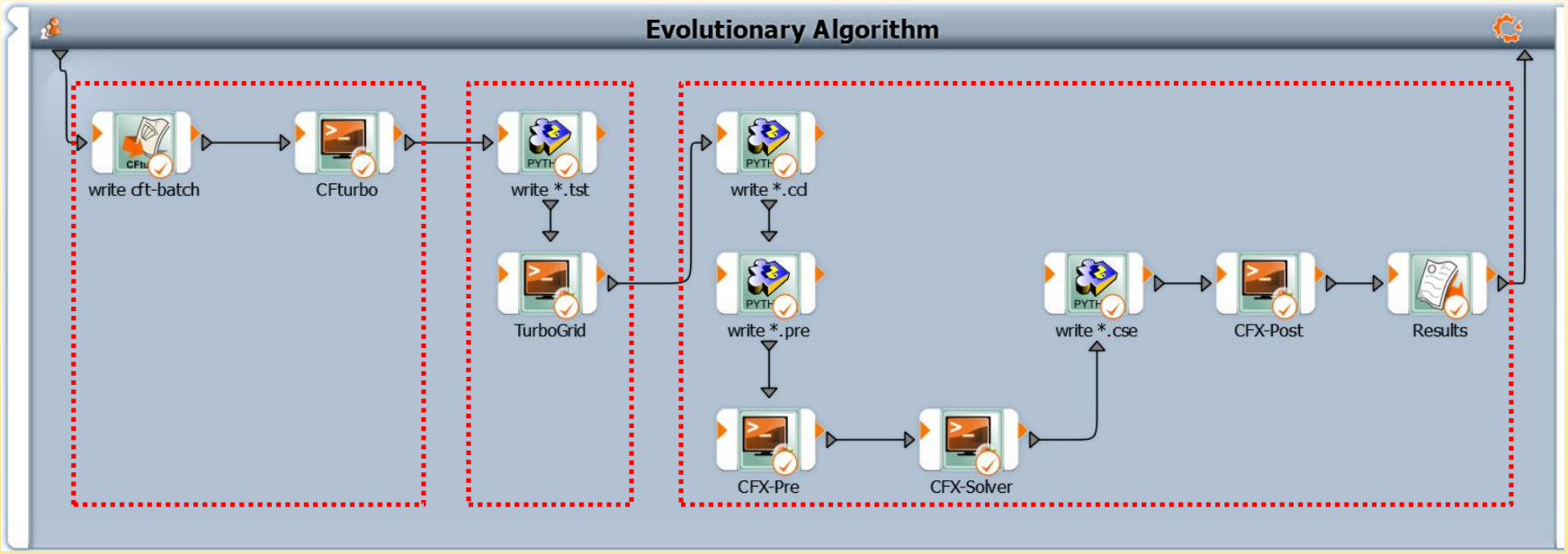

CFturbo
Turbomachinery Design

ANSYS TurboGrid, ICEM-CFD
Meshing

ANSYS CFX
Simulation

Optimization Definition

Challenge / Task

- Find the best impeller for a given and constant volute!

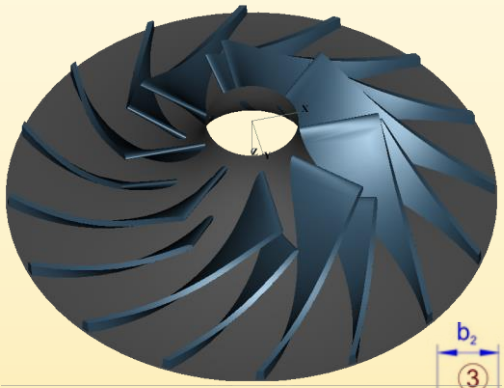

Goal

Stage Efficiency → Max.

Constraints

Power Consumption $P_i < 25.5$ kW
Total Pressure Ratio: $\Pi > 4.0$
Constant Volute

Parameters

More than 20 design parameters!

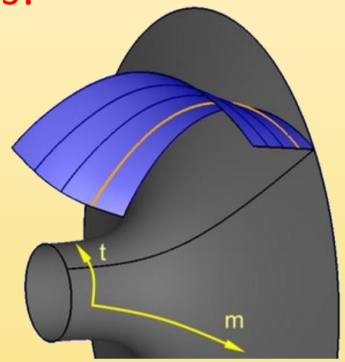

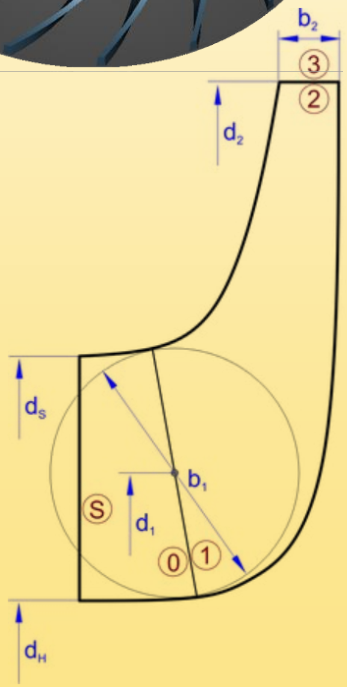

Main dimensions

- Suction diameter
- Impeller diameter
- Outlet width

Meridional contour

- Axial extension
- Contour of Hub and Shroud

Blade properties

- Number of blades
- Blade angles β_{B2}
- Blade mean line of main and splitter blade
- Leading edge of main and splitter blade
- Relative position of splitter blade
- Wrap angle for main and splitter blade

Evolutionary Algorithm (EA)

Imitates Evolution ("Optimization") in Nature:

- Survival of the fittest
- Evolution due to mutation, recombination and selection
- Developed for optimization problems where no gradient information is available, like binary or discrete search spaces
- Evolutionary strategy (Rechenberg 1964)
- Genetic algorithm (Holland 1962)

Evolution Strategies **Genetic Algorithms**

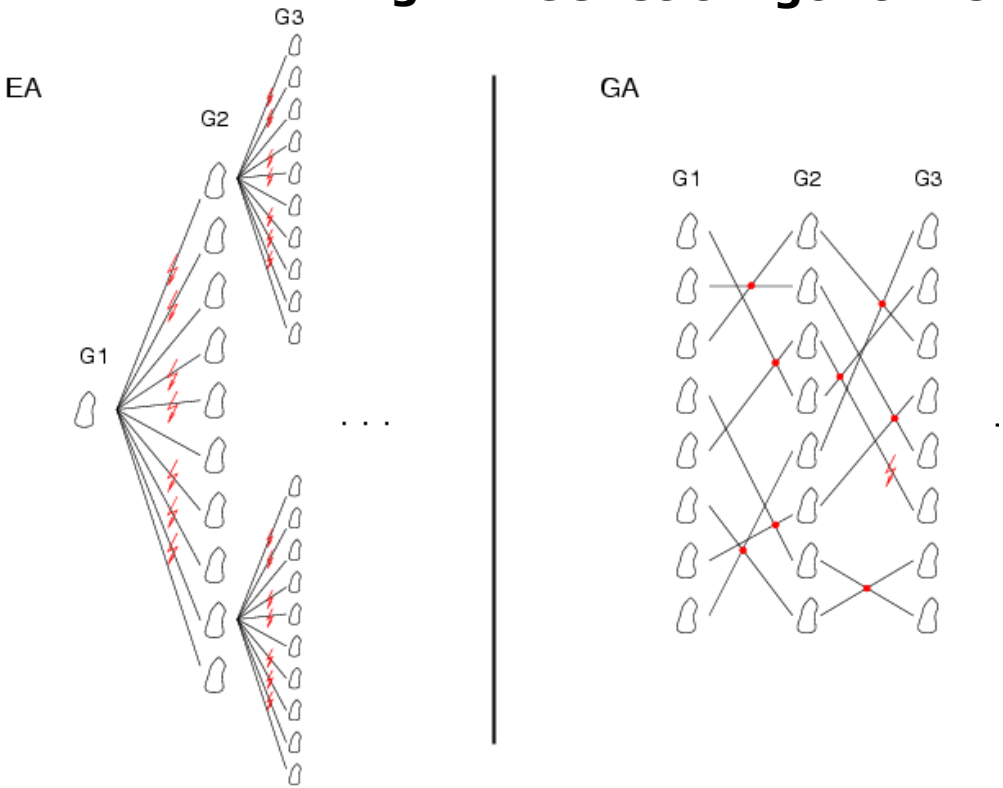

Evolutionary Algorithm (EA)

Terms

- Individual: design related to the design parameters
- Fitness: objective function, including penalties for constraints
- Population: group of individuals in one generation
- Archive: set of saved best individuals

Main operators

- Selection
- Recombination (Crossover)
- Mutation
- Replacement

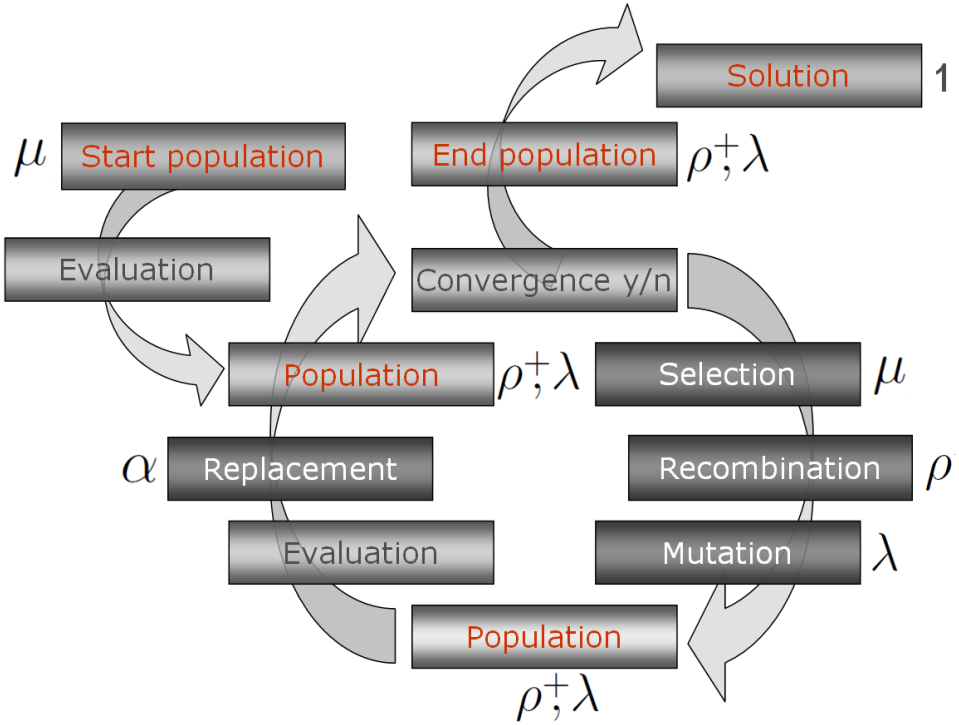

Optimisation Cluster elements

Head node = 1x PRIMERGY RX350 S8

CPU : E5-2637 v2 @ 3.50GHz (4 core)
MEM: 8*16384 MB /DDR3 /1866 Mhz
1*NVIDIA Tesla K40m
Mellanox FDR 1 port
4 * SAS 900GB 10 k
    2 disc in RAID1 for RedHat and HCS
    2 disc in RAID0 for data

Compute nodes = 8x PRIMERGY CX250 S2

CPU: 2*E5-2697V2 (12 core, 2,7GHz)
MEM: 16*8GB /1866 Mhz (on cn1 and cn2 8*16GB)
Mellanox FDR 1 port
RAID controller 0/1
2 * SAS 900GB 10 k
    2 disc in RAID0 for RedHat & data

System stack = Fujitsu HPC Cluster Suite (HCS)

Windows
OS: ~~RedHat Enterprise Linux 6.4~~
HCS version 2.2_04
    Advanced Edition
PBSpro: 12.2.0.133411
ICR certified

Fast interconnect = InfiniBand

Mellanox FDR for MPI and I/O
GbE for management and control

RDO Cluster Setup for CFTurbo workflow (Windows)

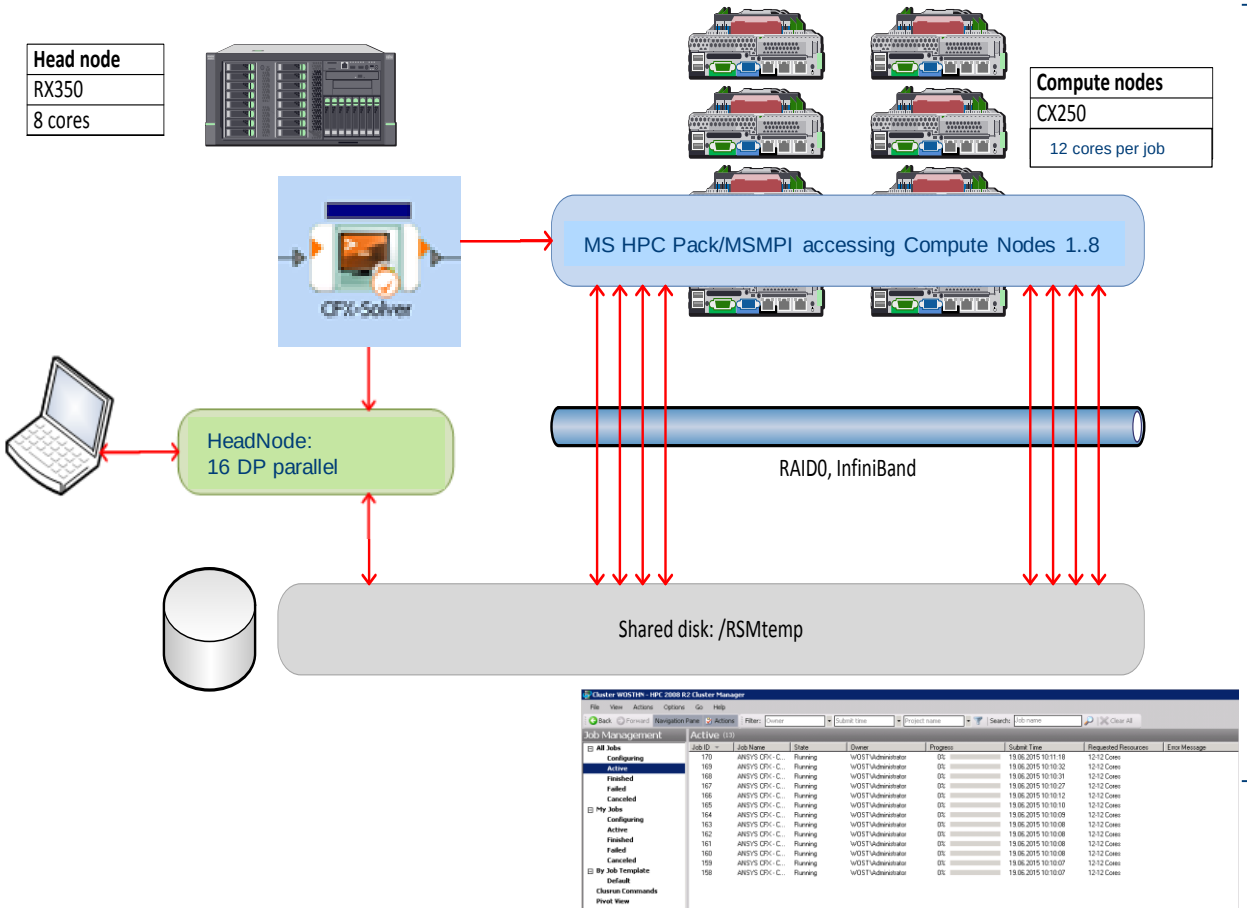

Pre-packaged as a ready-to-use appliance

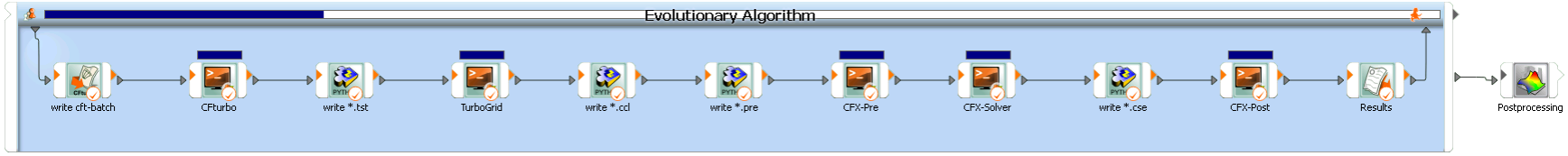

Optimized Design

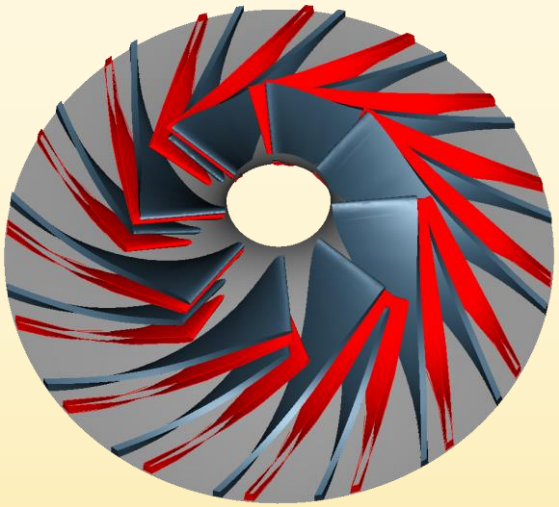

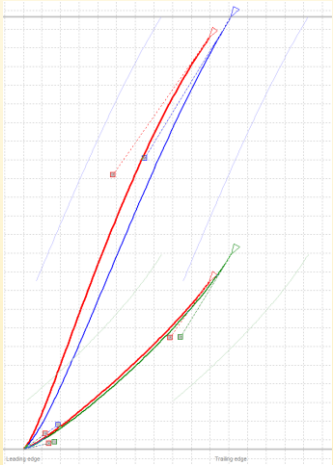

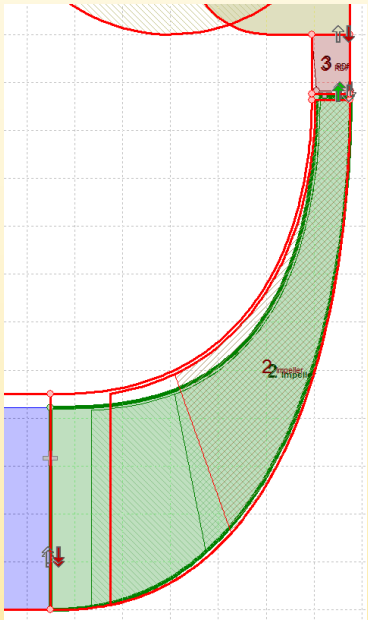

- ✓ Design complies with all constraints!
- ✓ Stage efficiency increased by 5% compared to reference!
- ✓ Appr. 600 Designs in less than 3 days!

	Initial	Optimized
Impeller Diameter	105 mm	105.61 mm
Suction Diameter	56 mm	53.71 mm
Outlet Width	3.2 mm	2.85 mm
N Blades	16	16
Blade angle	55°	58.6°
Wrap angle	57°	63.7°

Initial design
Optimized design

Total Pressure Ratio Π	Power Consumption P_i	Stage Efficiency η_{Stage}	Impeller Efficiency η_{Imp}
3.8	24,260	0.61	0.81
4.0	23,540	0.66	0.82

Optimized Design

Initial

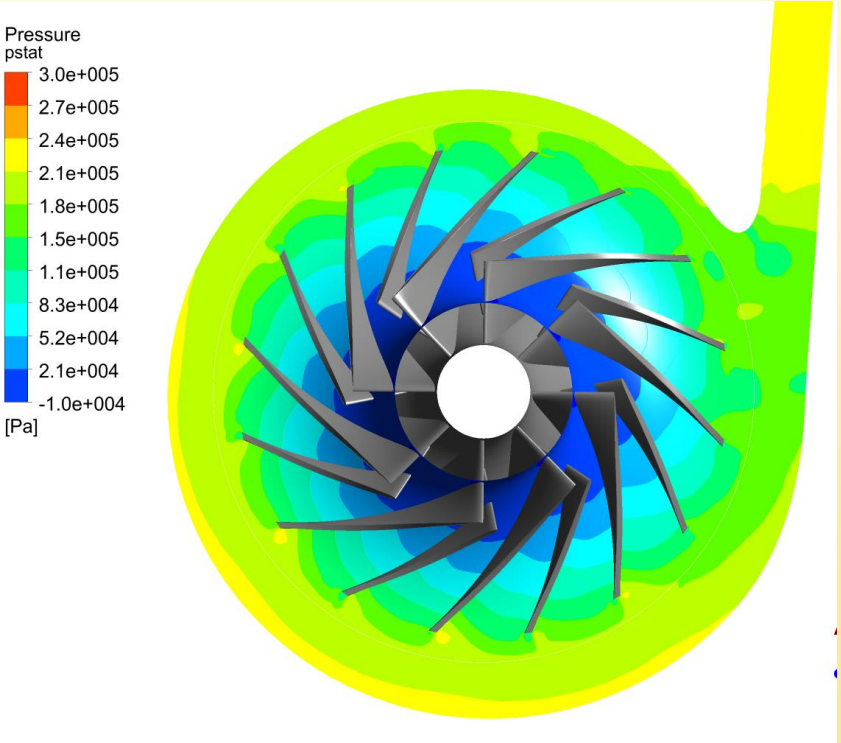

Optimized

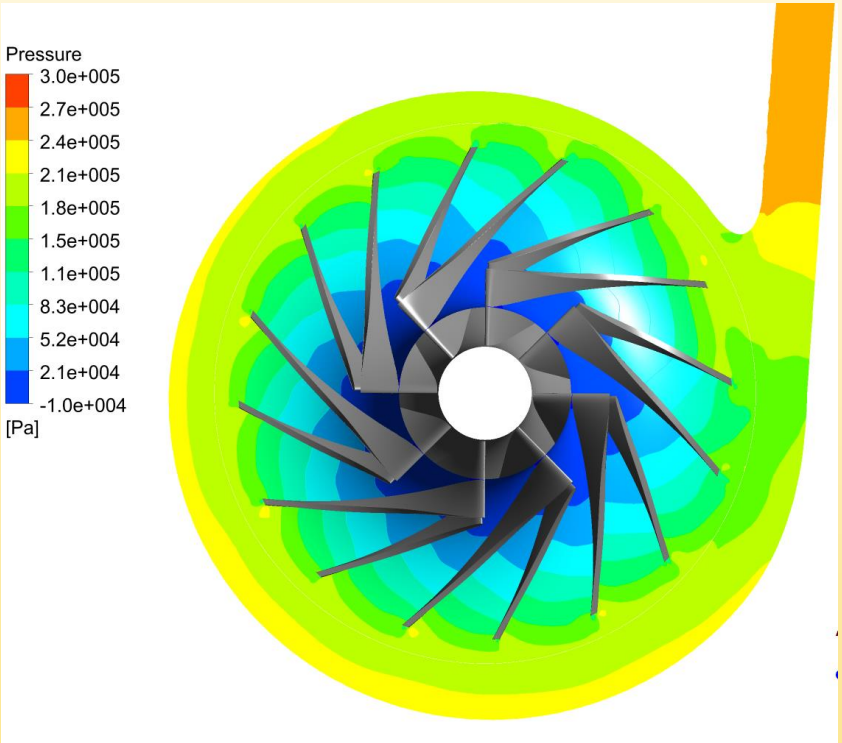

Optimized Design

Initial

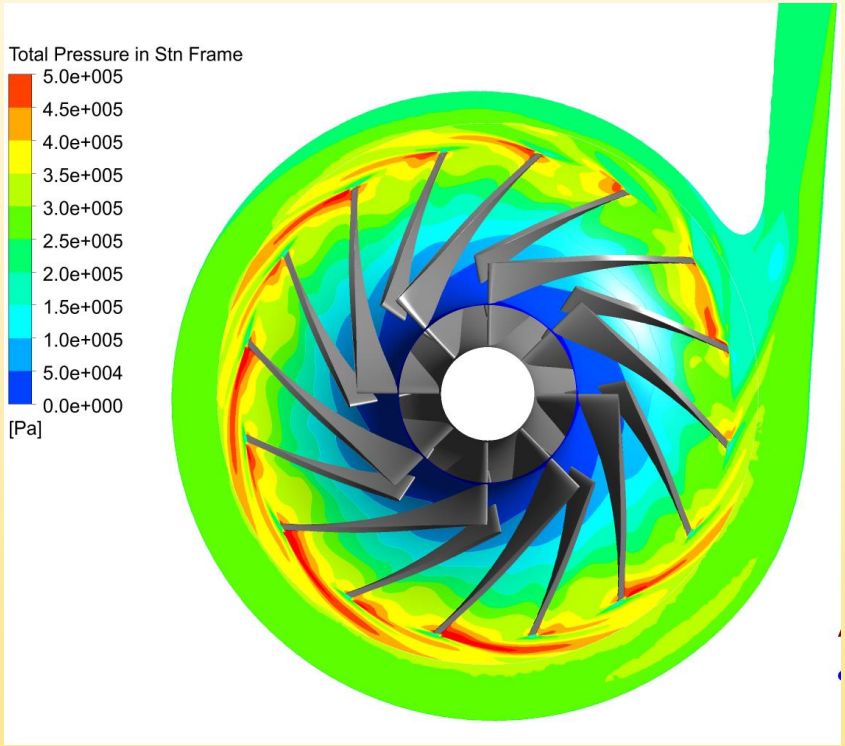

Optimized

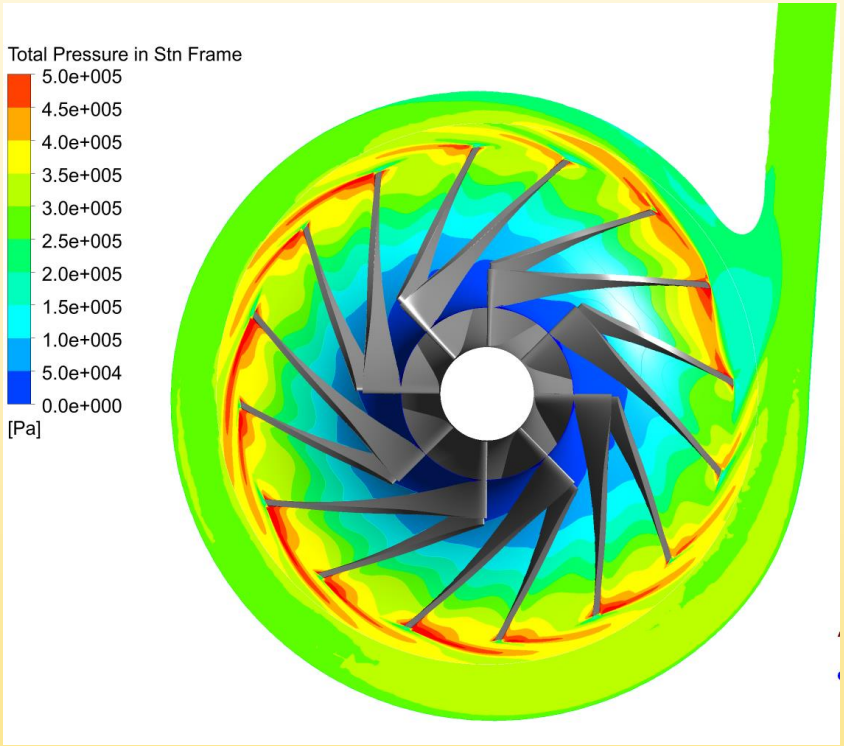

Optimized Design

Initial

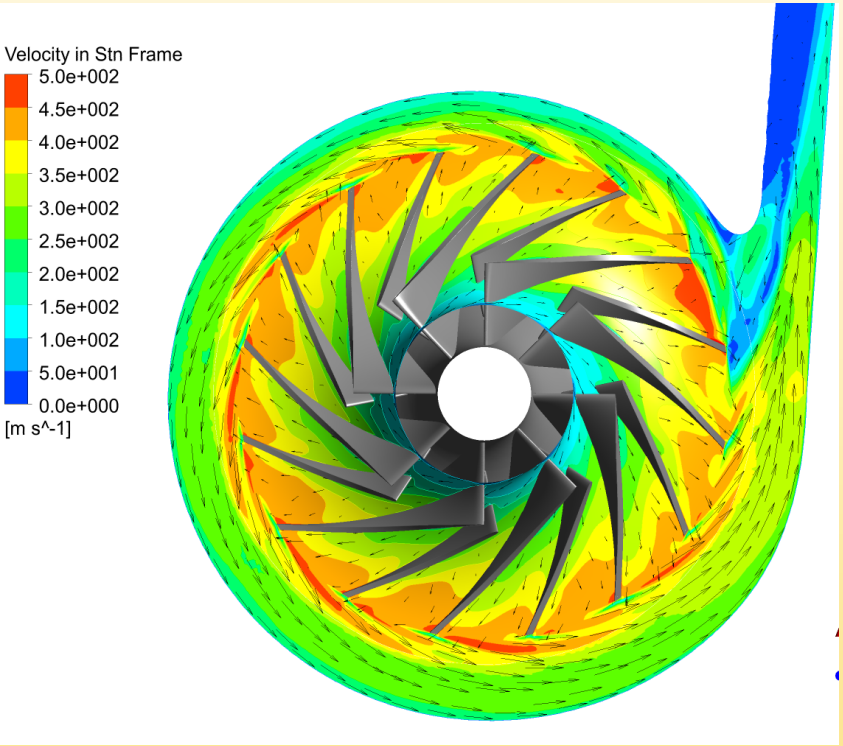

Optimized

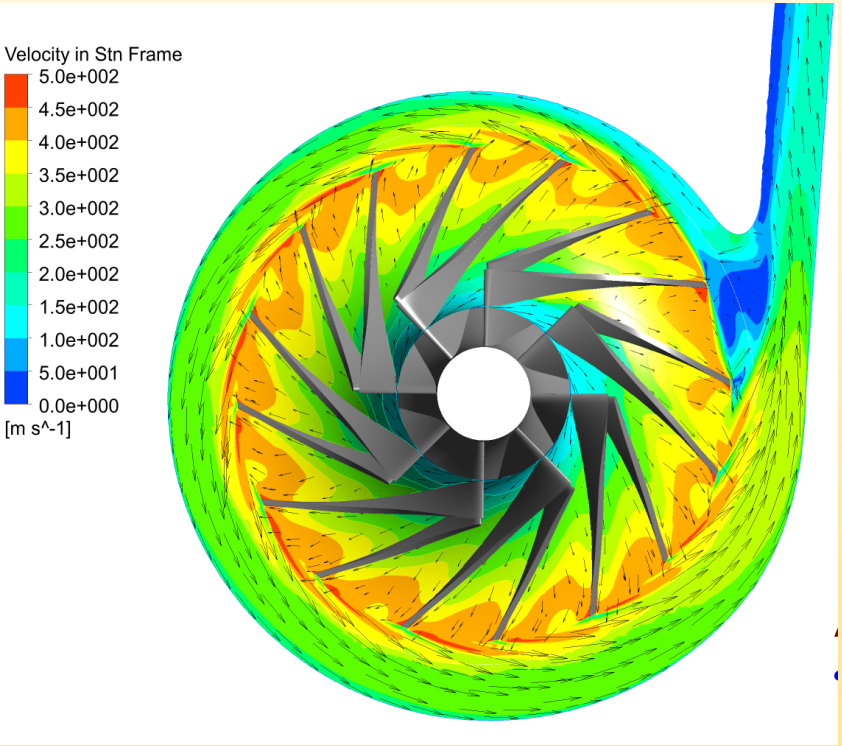

Optimized Design

Initial

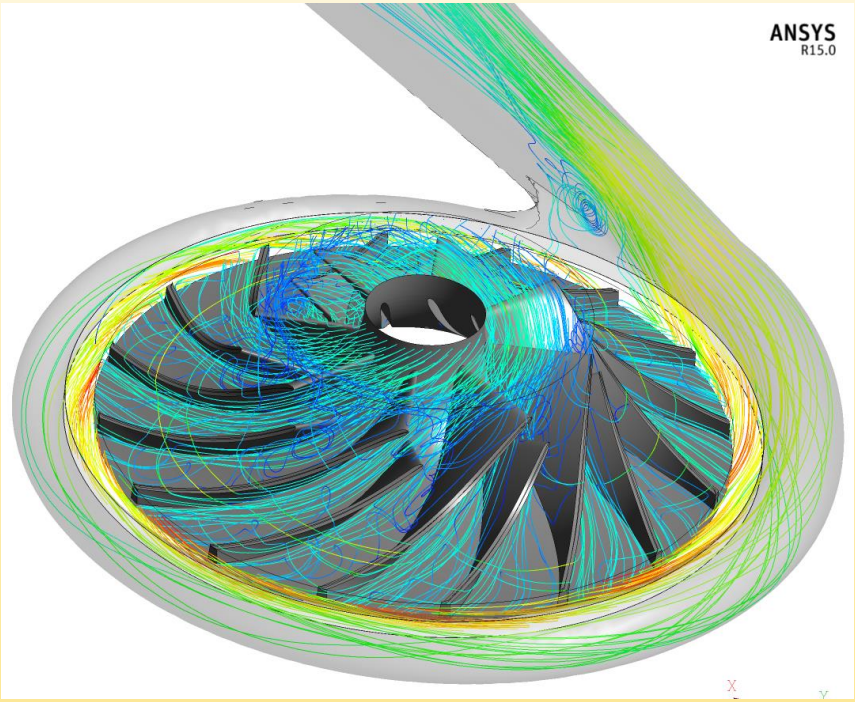

Optimized

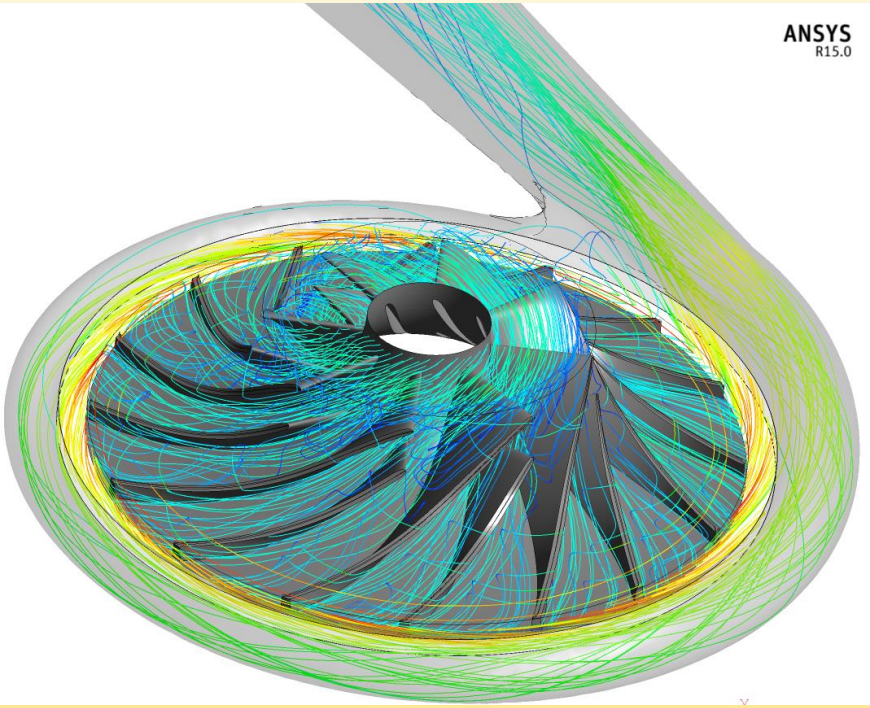

Reduced recirculation zone in volute → Better stage performance
Volute suboptimal → Should be re-designed

Existing workflow for single point turbomachinery optimization

- ✓ Parallelized optimization of a full stage radial compressor over the weekend
- ✓ Volute has to be customized to the impeller

<u>Open issues:</u>

- CFturbo ® outside Workbench does not allow RSM usage
- Empirical CFturbo® knowledge not available in optiSLang®

➢ **Empirical CFturbo® knowledge** combined with **optiSLang® algorithms** enables ultra-fast Turbomachinery optimization by reducing necessary number of optimization designs

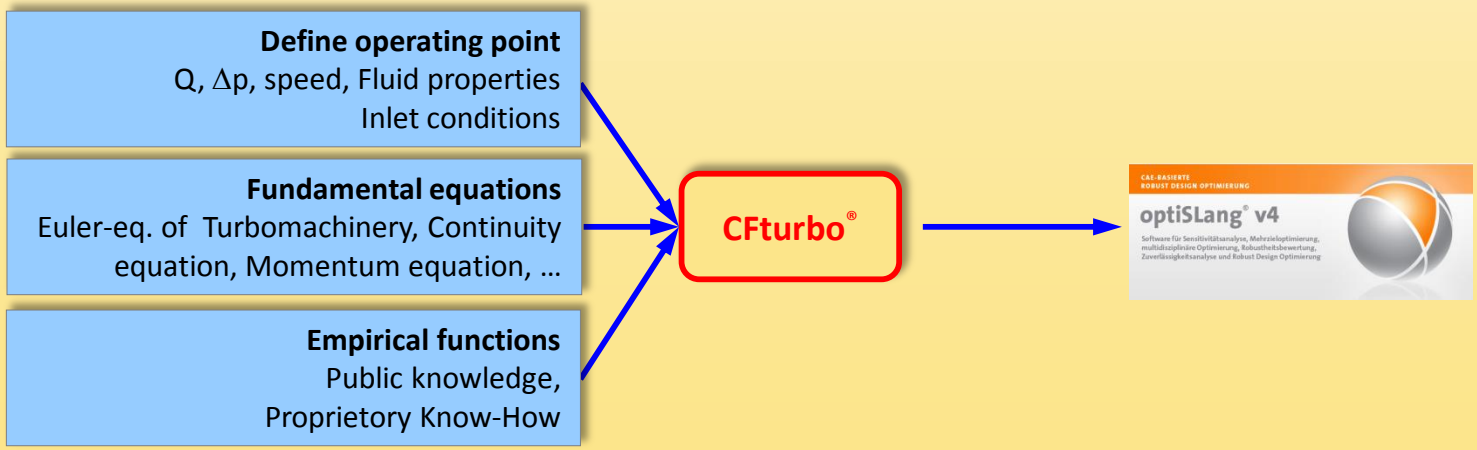

Further developments - workflow for multi-purpose optimization

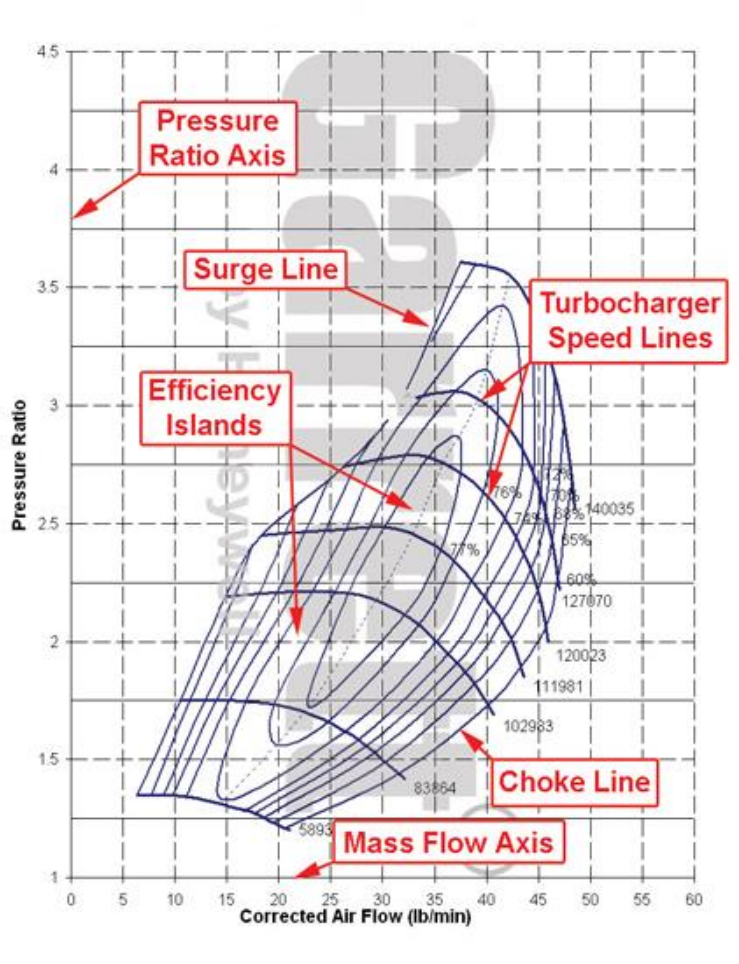

http://www.turbobygarrett.com/turbobygarrett/compressor_maps

- designs for wide compressor maps
- determine surge and choke
- full stage simulation including stability and rotor-dynamics
- enhanced accuracy by combined steady and transient simulation
- smart performance map predictions
- …

Thank you
for your interest

and

Stefan Marth
(Dynardo, Weimar)

Lars Krüger
(CADFEM, Grafing)

Ian Godfrey
(Fujitsu Systems Europe, Toulouse)

for their support!

Please visit us in the exibition area.